LARSEN & TOUBRO

Complete your panel with our panel accessories

L&T SWITCHGEAR
SAFE & SURE

Larsen & Toubro is a technology-driven company that infuses engineering with imagination. The Company offers a wide range of advanced solutions in the field of Engineering, Construction, Electrical & Automation, Machinery and Information Technology.

L&T Switchgear, a part of the Electrical & Automation business, is India's largest manufacturer of low voltage switchgear, with the scale, sophistication and range to meet global benchmarks. With over five decades of experience in this field, the Company today enjoys a leadership position in the Indian market with a growing international presence.

It offers a complete range of products including powergear, controlgear, industrial automation, building electricals & automation, reactive power management, energy meters, and protective relays. These products conform to Indian and International Standards.

AC Rotary Switches

Introduction

Cam Operated Rotary Switches used to perform Make and Break operation in a sequential way by rotating the switch to different positions.

The Cam, which closes and opens the contacts, has rotary movement in multiple positions, thereby controls multiple Circuit functions.

Further, the flexibility in the switch type selection covering various current / voltage ratings and options to select the number of contacts, is added advantage. This ensures that a right switch is chosen for the desired application. CAM Switches thus offer complete design flexibility to assemble complex switching programs, contact ratings and customize all switching applications. Cam Switches are suitable for AC as well as DC switching applications.

The basic operating mechanism of Cam Switch is to suit intended application coupled with 'Quick-Make', 'Quick-Make-Quick-Break' and 'Spring Return' operating mechanisms.

The Cam Switches offers versatile mounting options in addition to Standard Panel / Flush Mounting and other special features like single hole, door interlocking, padlock, lock and key for various needs. The wide option such as type of knob, front plate color and customized marking on the marking plate eliminates the need of separate label on the panel.

The superior quality of engineering material and "Double Butt" contacts with silver bimetal on copper/brass provide stable electrical performance. The high-grade engineering plastics with high tracking index like nylon, silicon and glass filled polyamide for the components ensures greater mechanical strength.

Advanced manufacturing processes for Cam Switch components under stringent quality conditions ensures durability, reliability and enhanced life.

General Construction

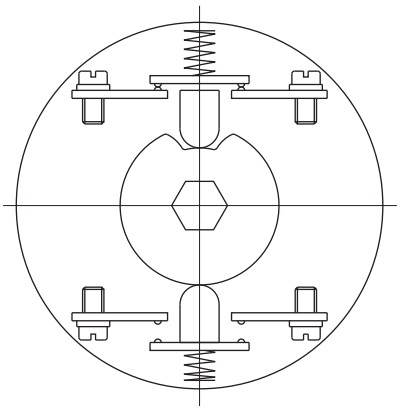

Cam Assembly

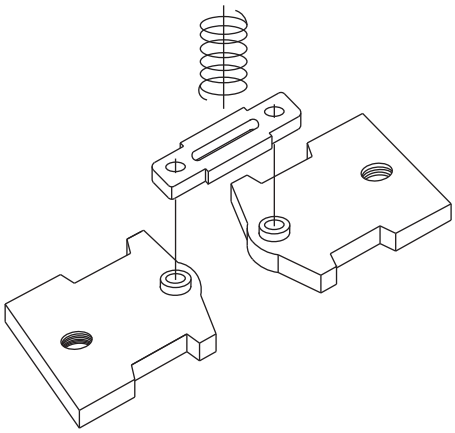

Contact Assembly

Series S, TP, RT and SL Cam Switches incorporate two double break silver alloy contacts per stage at 180 degree disposition. The AC Switches are 'Quick Make-Slow Break' with in-built latching device feature in cam design. The Cam Switches can be offered for DC applications with additional contacts in series according to the DC switching voltage and with suitable duration the DC Switches are 'Quick Make - Quick Break'.

Contacts	:	Double break type AgCdO	Operating temp	:	-15°C to 55°C
Insulation	:	Glass filled polyamide with high tracking index	Operating frequency	:	50 to 60 Hz
			Humidity	:	95%, Rh 48 hours

S Series Open Version

- Available from 6 to 400 A
- Open terminals for easy accessibility

TP Series Touch Proof

- Available from 6 to 20 A
- Finger protection (IP20)

RT Series Touch Proof & Rear Termination

- Available from 16 to 63 A
- Finger protection
- Convenient accessibility

SL Series Touch Proof & Screwless Termination

- Available from 6 & 10 A
- Finger protection (IP20)
- Cage clamp

AC Duty Rating

DC Duty Rating

Category	Typical AC Application	Category	Typical DC Application
AC-1	Non-Inductive or slightly inductive loads, Resistance furnaces	DC-1	Non-Inductive or slightly inductive loads, Resistance furnaces
AC-3	Squirrel-cage motors : starting switching off motors during running	DC-22	Switching of resistive loads, Including Control of DC electromagnets
AC-15	Control of AC electromagnetic loads	DC-13	Switching of motor loads or other
AC-21-A	Switching of resistive loads, Including moderate overloads (frequent switching)	DC-23	Highly inductive loads
AC-23-A	Switching of motor loads or other highly inductive loads (frequent switching)	----	-----

IEC/EN Ratings

AC Rating Code	Unit	S6 TP6	S10 TP10	S16/TP16/ RT16	S20/TP20/ RT20	S25 RT25	S32 RT32	S40 RT40	S63 RT53	S80	S100	S125	S200
Rated Operational Voltage (Ue)	V	440	440	690	690	690	690	690	690	690	690	690	690
Rated Frequency	Hz	50/60	50/60	50/60	50/60	50/60	50/60	50/60	50/60	50/60	50/60	50/60	50/60
Rated Impulse with stand Voltage (Uimp)	Kv	4	4	6	6	6	6	6	6	6	6	6	6
Rated Operational Current (Ie) AC21/AC1	A	6	10	16	20	25	32	40	63	80	100	125	200
Rated Uninterrupted Current (Ith)	A	8	12	20	25	32	40	50	80	100	125	150	225
Rated Operational Power													
AC23A "3 Ph, 415 V"	KW	2.2	3	7.5	7.5	11	15	18.5	22	33	41	45	55
	A	- -	- -	13	13	19	26	32	38	57	71	78	95
AC3	KW	1.5	3	5.5	5.5	7.5	11	15	18.5	22	33	37	45
"3 Ph, 415 V"	A	- -	- -	10	10	13	19	26	32	38	57	64	78
Short Circuit Capacity													
Rated Fuse Short Circuit Current	KA	3	3	5	5	10	10	20	20	25	25	25	25
Fuse Size (Type gG/gM)	A	6	10	16	20	25	32	40	63	80	100	125	200
Terminal Cross Section													
Single / Multiple min	mm^2	0.7	0.7	1.5	1.5	1.5	2.5	2.5	4	6	10	10	10
max	mm^2	1.5	1.5	4	4	4	6	10	16	25	35	50	70
Fine strand min	mm^2	0.7	0.7	1	1	1	1.5	2.5	2.5	6	10	10	10
max	mm^2	1.5	1.5	2.5	2.5	2.5	4	6	10	16	25	35	50
Terminal Cross Section	Metric	M3.5	M3.5	M3.5	M3.5	M4	M4	M5	M5	2XM5	2XM5	2XM5	M10
Terminal Tightening Torque	Nm	0.8	0.8	0.8	0.8	1.2	1.2	2	2	2.5	2.5	2.5	2.5

Note : Rated Duty: 8 Hours, Installation, Operation and Maintenance Condition: Suitable for Environment A (for Industrial Application). Switch life under standard operating conditions: Mechanical 100,000 operations @ 300 cycles / hour, Electrical 10,000 operations at 100% rated duty for 120 cycles/hour.

CSA/UL Ratings

AC Rating Code	Unit	S6	S10	S16 TP16 RT16	S20 TP 20 RT 20	S25 RT25	S32 RT32	S40	S63	S80	S100	S125	S200
Ampere Rating	A	6	10	15	20	20	30	40	55	80	100	100	175
Operational Voltage	V	460	460	600	600	600	600	600	600	600	600	600	600
HP Rating 1 Phase													
120 V	HP	0.25	0.33	0.33	0.33	1.5	1.5	2	3	-	-	-	-
240 V	HP	0.50	0.75	1	1	3	3	5	7.5	-	-	-	-
3 Phase													
120 V	HP	0.75	1	1.5	1.5	3	3	5	7.5	10	10	10	15
240 V	HP	1	1	3	3	7.5	7.5	10	15	20	20	20	25
480 V	HP	1	2	3	3	10	10	20	30	40	40	40	50
600 V	HP	-	-	5	5	15	15	24	40	50	50	50	50

Note : AC4 rating = AC3 rating / 2, Star Delta rating = 60% of AC3 rating

Conformance to standards :
European : IEC-60947-1 : 1988
IEC-60947-3 : 1990
IEC-60947-5 : 1992
Canadian : CSA 22.2 No.14-2010
American : UL 508 (2009)

Isolators - ON/OFF Switches

Isolators are ON-OFF Switches to isolate the power to a particular area of operation. Isolator Switch comes in a wide range from 1 Pole to 12 Poles. Isolators with spring return upto 4 Poles are available to energies circuits. Isolators with pre-close contacts are used for safety circuits and for connecting neutral and earth lines. Isolators are generally rated for AC1/AC21 while for motor applications they need to be rated for AC3/AC23 A duty.

Applications: Switching of main/control and instrumentation circuits motor ON-OFF and other special application circuits.

Connection Diagram

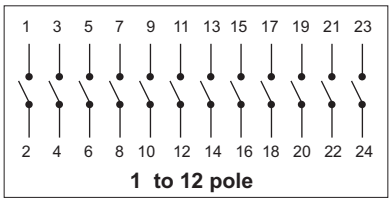

Stayput

Script Plate Marking	60 Degree 	90 Degree 	90 Degree Complete Rotation 	
Description	Programme Code	Programme Code	Programme Code	No. of Stages
1 Pole	61001	61191	61195	1
2 Pole	61002	61192	61198	1
3 Pole	61003	61199	61197	2
4 Pole	61004	61194	61196	2
5 Pole	61005	-	-	3
6 Pole	61006	61906	-	3
7 Pole	61007	-	-	4
8 Pole	61008	-	-	4
9 Pole	61009	-	-	5
10 Pole	61010	-	-	5
11 Pole	61011	-	-	6
12 Pole	61011	-	-	6
Feasible Ampere Rating: 6, 10, 16, 25, 32, 40, 63, 80, 100,125, 200 & 400 Amps				

Isolators with Preclose Contact

90 Degree 	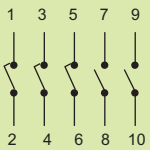 4 to 5 pole	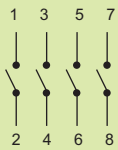 61194
Description	Programme code	No. of Stages
4 Pole - 1 Pole Preclose	61194	2
4 Pole - 3 Pole Preclose	61904	2
5 Pole - 3 Pole Preclose	61905	3
3 Pole with Neutral Terminal	61178	2
Feasible Ampere Rating: 6, 10, 16, 25, 32, 40, 63, 80, 100, 125, 200 & 400 Amps		

Spring Return Isolators 45 Degree

45 Degree Spring Return to OFF 	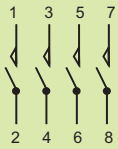 1 to 4 pole	
Description	Programme code	No. of Stages
1 Pole Spring Return	61351	1
2 Pole Spring Return	61352	1
3 Pole Spring Return	61353	2
4 Pole Spring Return	61354	2
Feasible Ampere Rating: 6, 10, 16, 25, 32, 40 & 63 Amps		

Changeover Switches with OFF

Changeover Switches also called Double Throw Switches are available with OFF and without OFF. These are used to operate two different circuits with different number of inputs and outputs. Changeover Switches without Jumpers (potential free contacts) are used to connect two different circuits from two different sources with two different operating voltages or any other incompatible lines. All contacts by default are 'Break Before Make' (BBM) type to avoid overlapping of different circuits. However, for overlapping changeover contacts. 'Make Before Break' (MBB) type are offered against specific requirements.

Application: Power Supply to Generator Changeover, Auto/Manual Changeover, Standby/Remote Changeover and other special application circuits. Mainly used in Distribution Panels, UPS etc.

Connection Diagram

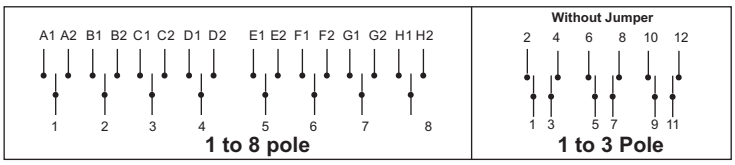

Stayput

60 Degree			90 Degree	
				
Description	**Programme code**	**No. of Stages**	**Description**	**Programme code**
1 pole	61025	1	1 pole	61151
2 pole	61026	2	2 pole	61152
3 pole	61027	3	3 pole	61153
4 pole	61028	4	4 pole	61154
5 pole	61029	5	-	-
6 pole	61030	6	-	-
7 pole	61031	7	-	-
8 pole	61032	8	-	-
Feasible Ampere Rating: 6, 10, 16, 25, 32, 40, 63, 80, 100, 125, 200 & 400 Amps				

Spring Return

45 Degree Spring Return to 0			Spring Return from 1 to 0	
				
Description	**Programme code**	**No. of Stages**	**Description**	**Programme code**
1 pole	61625	1	1 pole	61364
2 pole	61362	2	2 pole	61365
3 pole	61363	3	3 pole	61369
Feasible Ampere Rating: 6, 10, 16, 25, 32, 40 & 63 Amps				

Without Jumper

60 Degree Stayput without Jumper			45 Degree Spring return without Jumper	
				
Description	**Programme code**	**No. of Stages**	**Description**	**Programme code**
1 pole without jumper	62625	1	1 pole without jumper	61761
2 pole without jumper	61626	2	2 pole without jumper	61762
3 pole without jumper	61627	3	-	-
Feasible Ampere Rating: 6, 10, 16, 25, 32, 40, 63, 80, 100, 125, 200 & 400 Amps			Feasible Ampere Rating: 6, 10, 16, 25, 32, 40 & 63 Amps	

Changeover Programmes without OFF

Connection Diagram

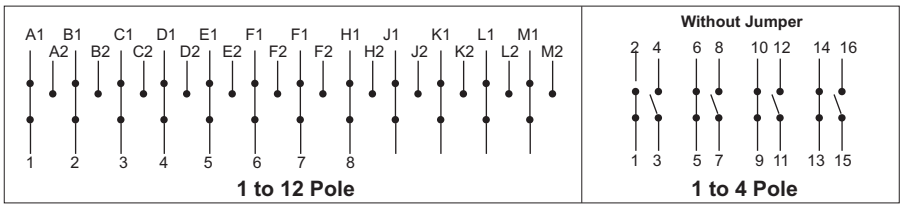

Stayput

90 Degree Complete Rotation			60 Degree		
					
Description	**Programme code**	**No. of Stages**	**Description**	**Programme code**	**No. of Stages**
1 pole	61037	1	5 pole	61041	5
2 pole	61038	2	6 pole	61042	6
3 pole	61039	3	7 pole	61043	7
4 pole	61040	4	8 pole	61044	8
-	-	-	9 pole	61045	9
-	-	-	10 pole	61046	10
-	-	-	11 pole	61047	11
-	-	-	12 pole	61048	12
Feasible Ampere Rating Applicable: 6, 10, 16, 25, 32, 40, 63, 80, 100, 125, 200 & 400 Amps					

Spring Return

45 Degree Spring Return		
		
Description	**Programme code**	**No. of Stages**
1 pole	61371	1
2 pole	61372	2
3 pole	61373	3
Feasible Ampere Rating: 6, 10, 16, 25, 32, 40 & 63 Amps		

Without Jumper

90 Degree Stayput without Jumper			45 Degree Spring return without Jumper	
				
Description	**Programme code**	**No. of Stages**	**Description**	**Programme code**
1 pole without jumper	61637	1	1 pole without jumper	61771
2 pole without jumper	61638	2	-	-
3 pole without jumper	61639	3	-	-
4 pole without jumper	61640	4	-	-
Feasible Ampere Rating: 6, 10, 16, 25, 32, 40, 63, 80, 100, 125, 200 & 400 Amps			Feasible Ampere Rating: 6, 10, 16, 25, 40 & 63 Amps	

Multistep (Pole-Way) Switches with OFF

These switches are also called as Pole-Way switches, they are available with OFF & without OFF. Multistep does the function of connecting different circuits to a common supply or vice versa. 1 pole, 2 pole & 3 pole are popular for 1 Ph, 2 Ph & 3 Ph supply.

Application : Typical usage tap changing switch for Transformer / Stabilizer and other special application circuits.

Prog No.	Description	Script Plate Marking	Connecting Diagram / Terminal Marking	No. of Stages
61059	1 Pole-2 Way	 2 Way - 60°	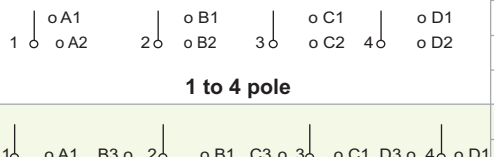 **1 to 4 pole**	1
61079	2 Pole-2 Way			2
61099	3 Pole-2 Way			3
61130	4 Pole-2 Way			4
61060	1 Pole-3 Way	 3 Way - 90°	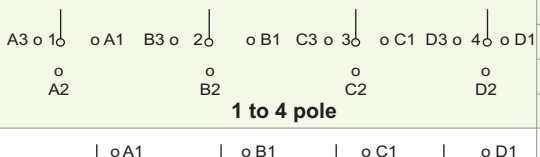 **1 to 4 pole**	2
61080	2 Pole-3 Way			3
61100	3 Pole-3 Way			5
61131	4 Pole-3 Way			6
61061	1 Pole-4 Way	 4 Way - 60°	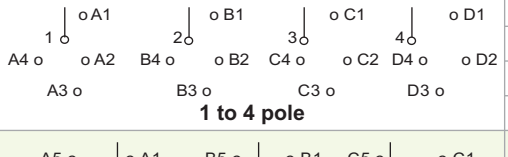 **1 to 4 pole**	2
61081	2 Pole-4 Way			4
61101	3 Pole-4 Way			6
61132	4 Pole-4 Way			8
61062	1 Pole-5 Way	 5 Way - 60°	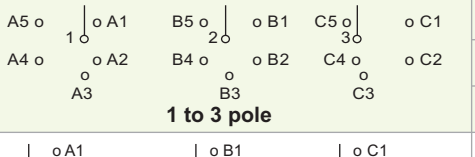 **1 to 3 pole**	3
61082	2 Pole-5 Way			5
61102	3 Pole-5 Way			8
61063	1 Pole-6 Way	 6 Way - 45°	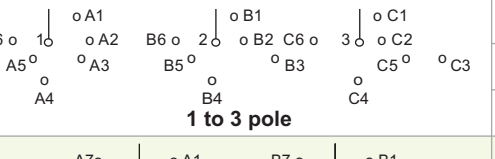 **1 to 3 pole**	3
61083	2 Pole-6 Way			6
61103	3 Pole-6 Way			9
61064	1 Pole-7 Way	 7 Way - 45°	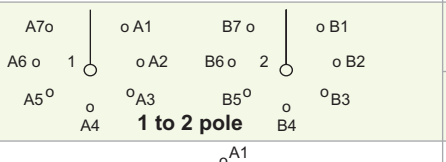 **1 to 2 pole**	4
61084	2 Pole-7 Way			7
61065	1 Pole-8 Way	 8 Way - 30°	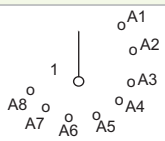	4
61066	1 Pole-9 Way	 9 Way - 30°	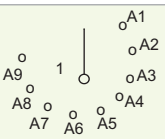	5
61067	1 Pole-10 Way	 10 Way - 30°	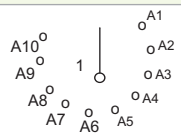	5
61068	1 Pole-11 Way	 11 Way - 30°	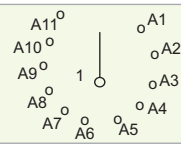	6
Feasible ampere ratings: 6, 10, 16, 25, 32, 40, 63, 80, 100, 125 & 200 Amps				

Multistep (Pole-Way) Switches without OFF

Prog No.	Description	Script Plate Marking	Connecting Diagram / Terminal Marking	No. of Stages
61049	1 Pole-3 Way	 3 Way-60°	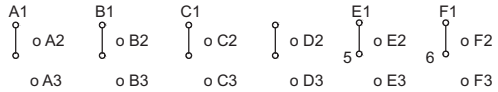 1 to 6 pole	2
61069	2 Pole-3 Way			3
61089	3 Pole-3 Way			5
61120	4 Pole-3 Way			6
61124	5 Pole-3 Way			8
61126	6 Pole-3 Way			9
61050	1 Pole-4 Way	 4 Way-90°	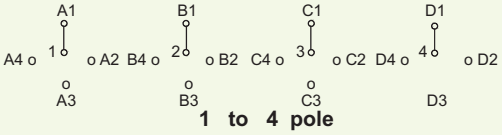 1 to 4 pole	2
61070	2 Pole-4 Way			4
61090	3 Pole-4 Way			6
61121	4 Pole-4 Way			8
61051	1 Pole-5 Way	 5 Way-60°	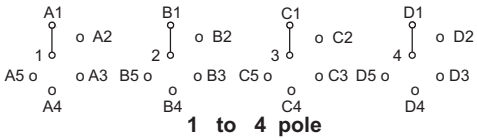 1 to 4 pole	3
61071	2 Pole-5 Way			5
61091	3 Pole-5 Way			8
61122	4 Pole-5 Way			10
61052	1 Pole-6 Way	 6 Way-60°	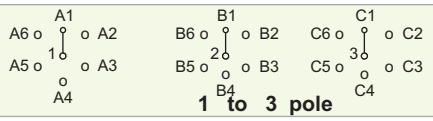 1 to 3 pole	3
61072	2 Pole-6 Way			6
61092	3 Pole-6 Way			9
61053	1 Pole-7 Way	 7 Way-45°	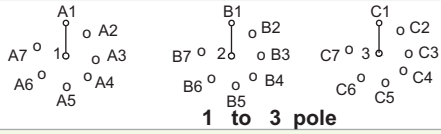 1 to 3 pole	4
61073	2 Pole-7 Way			7
61093	3 Pole-7 Way			11
61054	1 Pole-8 Way	 8 Way-45°	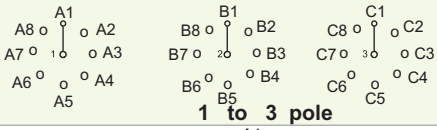 1 to 3 pole	4
61074	2 Pole-8 Way			8
61094	3 Pole-8 Way			12
61055	1 Pole-9 Way	 9 Way-30°	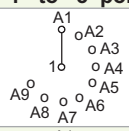	5
61056	1 Pole-10 Way	 10 Way-30°	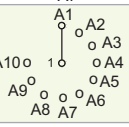	5
61057	1 Pole-11 Way	 11 Way-30°	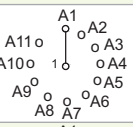	6
61058	1 Pole-12 Way	 12 Way-30°	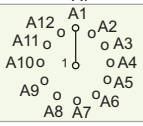	6

Multistep Switches Without Jumper

61649	1 Pole-3 Way without OFF without Jumper	 3 Way -60°	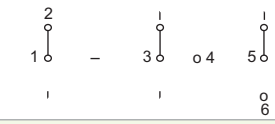	2
61650	1 Pole-4 Way without OFF without Jumper	 4 Way -90°	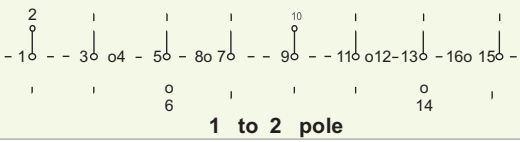 1 to 2 pole	2
61670	2 Pole-4 Way without OFF without Jumper			4
Feasible Ampere Ratings: 6, 10, 16, 25, 32, 40, 63, 80, 100, 125 & 200 Amps				

Instrumentation Selector Switches

With the help of these switches we can:

- Measure Currents in different circuit switch Current Transformer, a single Ammeter & a switch
- Measure Voltages between Phases and Phase & Neutral with one voltmeter & a switch
- Measure Voltages & Currents of a circuit with one Voltmeter, one Ammeter and a single switch

Voltmeter Selector Switches

Prog No.	Description	Script Plate Marking	Connecting Diagram / Terminal Marking	No. of Stages
61312	3 ph Line to Line		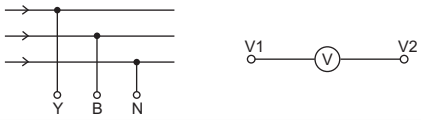	2
61313	3 ph Line to Line & Line to Neutral		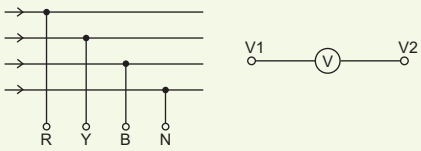	3
61314	3 ph Line to Line Line to Neutral & without OFF			3
61317	3 ph Line to Line & L1 to N		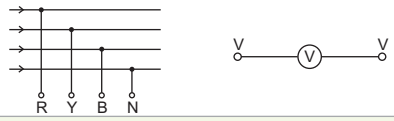	3
61318	3 ph Line to Line 2 Sources	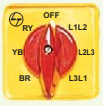	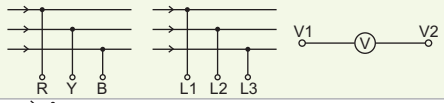	4
61311	3 ph Line to Neutral		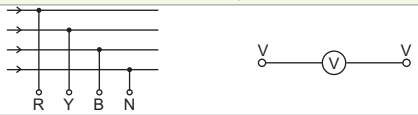	2
61319	3 ph Line to Line without OFF		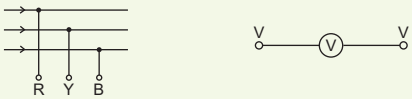	2
Feasible Ampere Rating: 6, 10, 16, 25 & 32 Amps				

Voltmeter & Ammeter Selector Switches

Prog No.	Description	Script Plate Marking	Connecting Diagram / Terminal Marking	No. of Stages
61336	3 Voltages Line - Line & 3 Currents		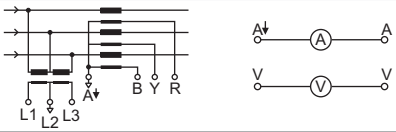	5
61337	4 Voltages & 3 Currents		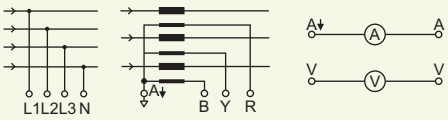	6
61338	3 Voltages Line to Neutral & 3 Currents		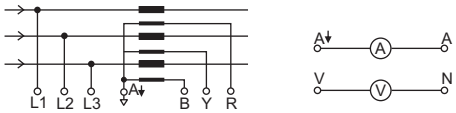	5
Feasible Ampere Ratings: 6, 10, 16, 25 & 32 Amps				

Ammeter Selector Switches

Prog No.	Description	Script Plate Marking	Connecting Diagram / Terminal Marking	No. of Stages
61325	1 Pole-3 Transformer with OFF	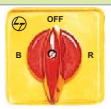	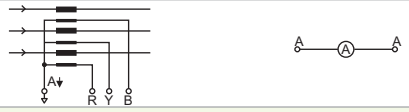	3
61321	1 Pole-1 Transformer		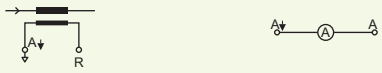	1
61331	1 Pole-2 Transformer		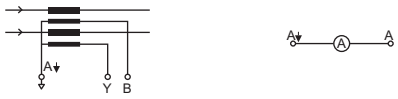	2
61384	1 Pole-3 Transformer without OFF		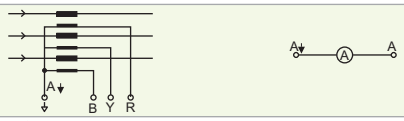	3
61326	1 Pole-4 Transformer with OFF		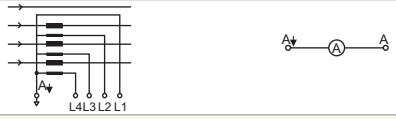	4
61327	2 Pole-2 Transformer with OFF		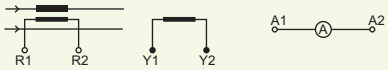	3
61328	2 Pole-3 Transformer with OFF	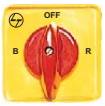	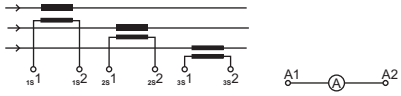	5
61329	2 Pole-3 Transformer without OFF			5
61330	2 Pole-4 Transformer without OFF		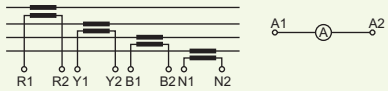	6
71000	Direct Ammeter Selector without Current Transformer	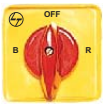		5

Power Factor Meter Switches

73078	One Current Transformer One Voltage Transformer		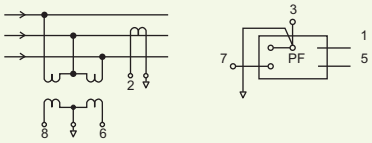	2
	Two Current Transformer		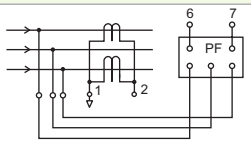	2

Wattmeter Switch

73071	Two watt meter Method		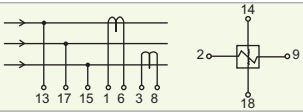	5
Feasible Ampere Rating: 10 & 16 Amps				

These switches directly operate the motor with AC3 or AC4 Duty Rating. They are mainly used for motor Forward - Reversing, Star-Delta, two speed Forward - Reversing and other special switches designed to operate with contactor with built-in tripping feature in the event of power failure and overload.

Motor Reversing Switches

Prog No.	Description	Script Plate Marking	Connecting Diagram / Terminal Marking	No. of Stages
61210	2 Pole		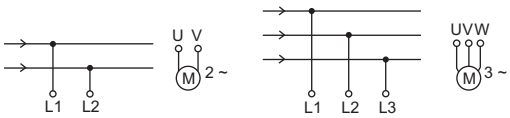	2
61211	3 Pole			3
61253	3 Pole Spring Return	 Spring Return to "0"	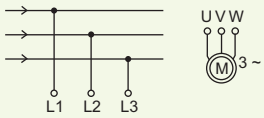	3

Motor Switches / Star-Delta Switches

Prog No.	Description	Script Plate Marking	Connecting Diagram / Terminal Marking	No. of Stages
61200	OFF-STAR-DELTA		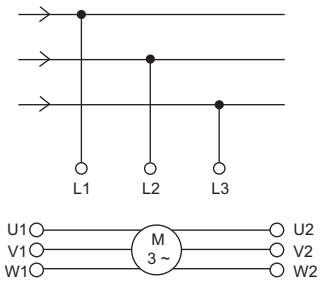	4
61201	Spring Return from STAR to OFF			4
61203	Standard		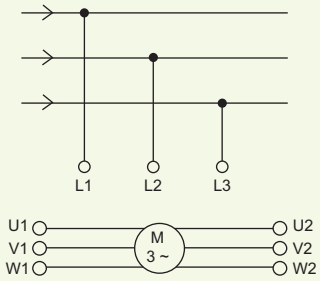	5
61239	Star Delta with Sequence Locking & LMD Contacts		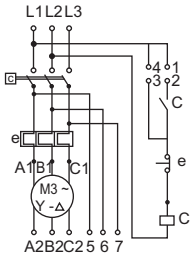	3
61240	For use with Contactors		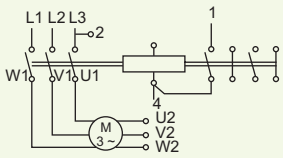	4
Feasible Ampere Rating: 6, 10, 16, 25, 32, 40 & 63 Amps				

Motor Switches / Multi Speed Switches

Prog No.	Description	Script Plate Marking	Connecting Diagram / Terminal Marking	No. of Stages
61212	2 Speed in one direction Single Winding		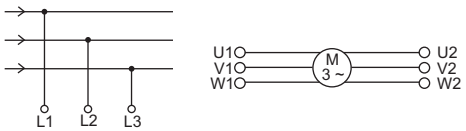	4
61213	2 Speed with Center OFF Single Winding		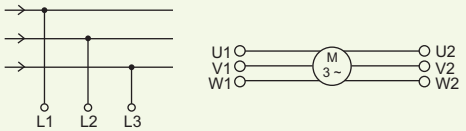	4
61215	2 Speed Single Winding for use with Contactors		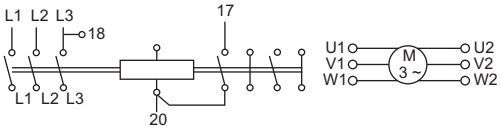	5
61217	2 Speed Single Winding Forwarding/Reversing		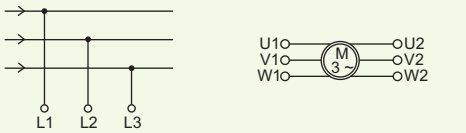	6
61219	2 Speed 2 Separate Windings		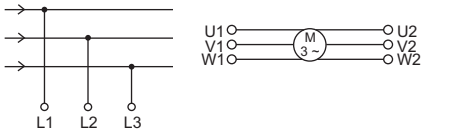	3
61226	3 Speed 2 Windings (O-A-B-A)		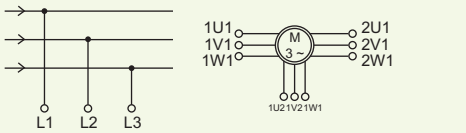	6
61243	3 Speed 2 Windings (O-A-B-B)		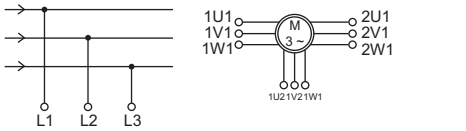	6
Feasible Ampere Rating: 6, 10, 16, 25, 32, 40 & 63 Amps				

Motor Switches - Start & Run Switches

Prog No.	Description	Script Plate Marking	Connecting Diagram / Terminal Marking	No. of Stages
61208	Split-phase Start	Spring return from start to "0" 	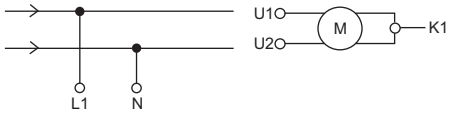	2
61209	Split-phase Start Reversing	Spring return from start 	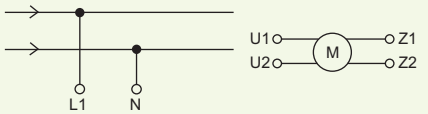	3
61270	Split-phase Start Reversing Switching		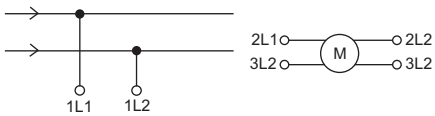	3
Feasible Ampere Rating: 6, 10 & 16 Amps				

Gang Switches

These switches are called Gang Switches, as they increase the capacity of circuits by ganging. They are used for Serialing or Paralleling to derive different circuit capacity. The power of Battery supply can be increased by serialing . The power of resistor can be increased by Paralleling.

Applications: In Railway coaches for controlling the Battery supply, in Dept of Telecommunication panels and special application circuits.

Prog No.	Description	Script Plate Marking	Connecting Diagram / Terminal Marking	No. of Stages
61109	2 Gang with OFF 1 Pole	2 Gang  60°	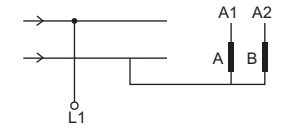 1Pole	1
61117	2 Gang with OFF 2 Pole		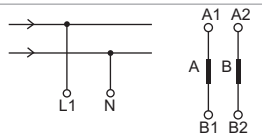 2 Pole	2
61111	2 Gang with OFF 3 Pole		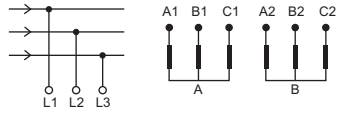 3 Pole	3
61110	3 Gang with OFF 1 Pole	3 Gang  90°	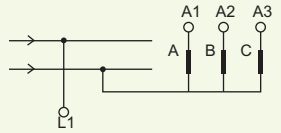 1 Pole	2
61118	3 Gang with OFF 2 Pole		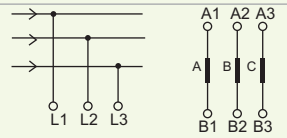 3 Pole	3
61112	3 Gang with OFF 3 Pole		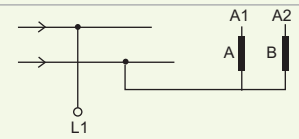 1 Pole	5
61113	2 Gang, Series with OFF 1 Pole	2 Gang Series  90°	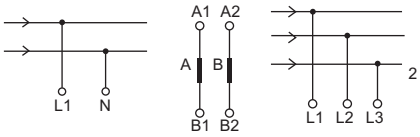 2 Pole	1
61115	2 Gang, Series with OFF 2 Pole		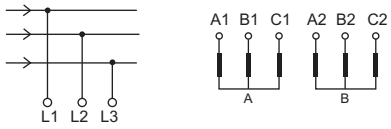 3 Pole	2
61114	2 Gang, Series with OFF 3 Pole		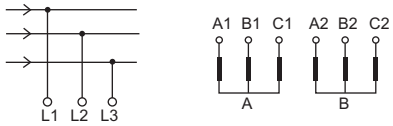 3 Pole	3
61116	2 Gang Series-Parallel with OFF 2 Pole	2 Gang Series Parallel  90°	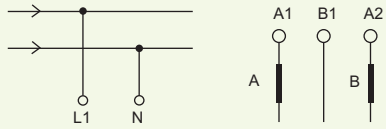 3 Pole	2
Feasible Ampere Rating: 6, 10, 16, 25, 32, 40 & 63 Amps				

Control Switches

Control Switches are used to energies contactors for controlling motor operations. Most of the Switches are 'Spring Return' type for latching of the circuit with NO contact and facilitate tripping by the tripping device.

Applications: Control Switches offer unique alternative to multiple "Push Button Stations", when one Switch controls instead of many Push Buttons. Control Switch with many positions are offered for a suitable combination.

Prog No.	Description	Script Plate Marking	Connecting Diagram/ Terminal Marking	No. of Stages
61300	1 Pole STOP-START with Spring Return	 spring return	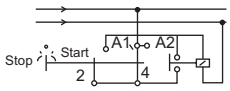	1
61388	2 Pole STOP-START with Spring Return		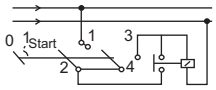	2
61301	1 Pole STOP-START with Spring Return from START to RUN	 spring return from start to "1"	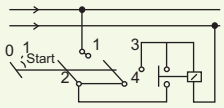	1
61701	Without Jumper			
61307	STOP-START Switch with Spring Return to run for 2 units	 spring return from start	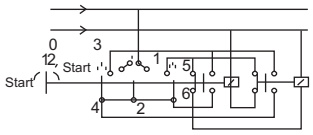	2
61707	Without Jumper			
61366	Contactor Control with Spring Return to OFF	 spring return to "0"	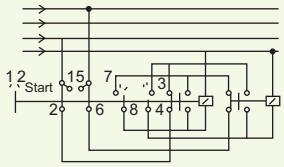	2
61271	Motor Voltage Control Switch		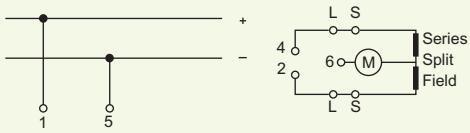	2

Feasible Ampere Rating:
6, 10, 16, 25, 32, 40 & 63 Amps

Mounting Feasibility

Mounting Code	Description	Feasibility					
		6/10A	16/20A	25/32A	40/63A	80/100/ 125A	200/ 400A
B03	Front Mounting, Standard Mounting plate		✓	✓	✓	✓	✓
B13	Front Mounting with next size plate	✓	✓	✓	✓	✓	✓
B00	Front Mounting 48x48 plate for 25/32 A and 64x64 plate for 40/63 A			✓	✓		
B19	Single Hole Mounting 32x32 plate for 6/10 A only 48x48 Plate for 16-32 A	✓	✓	✓			
B14	Single Hole Mounting 48x48 plate for 6/10 A	✓					
B33	Front Mounting with Round Padlock for 2 Position (for Isolators)		✓	✓	✓	✓	✓
B30	Front Mounting with Rectangular Padlock 2 Position (for Isolators)		✓	✓	✓	✓	✓
B63	Key Lockable type (Handle/Knob)		✓	✓	✓		
B90	Center Key Lock (Pistol grip Handle in black color only)		✓	✓			
B02	Rear/(Back/Base) Mounting	✓	✓	✓	✓	✓	✓
B21	DIN Rail Mounting on 35 mm Rail 6-32 Amps	✓	✓	✓			✓
B32	Rear/Base Mounting, Door Interlock + Rectangular Padlock (B30+B42)		✓	✓	✓	✓	✓
B34	Rear/Base Mounting, Door Interlock + Round Padlock (B33+B42)		✓	✓	✓	✓	✓
B41	Rear Mounting with Clutch Mechanism on Door		✓	✓	✓	✓	✓
	(Door Open in all position without Interlock)						✓
B42	Rear Mounting with Interlock Mechanism on Door						
F47	Door Clutch, Mounting Plate at front						
B17	ABS Enclosure Max stages	upto 4	upto 3	upto 5	upto 5		
B31	ABS Enclosure with Round Padlock (B33+B17) Max stages		upto 2	upto 2	upto 2		
M17	Metal Enclosure Max stages	upto 4	upto 4	upto 3			✓
A17	Aluminium Enclosure Max stages	upto 4	upto 3	upto 2			
B40	Single Hole Mounting with Padlock 48x48 Plate For 16-32 A		✓	✓			
B43	Single Hole Mounting with Center key 48x48 Plate for 16-32 A		✓	✓			
B45	Single Hole Mounting with Round Ring with Knob 16 A-32 A		✓	✓			

B03

IP55 protection from front

Features:

- Standard 4 Hole front panel mounting
- Knob / Handle operable
- Suitable for all switching angles and Spring Return Switches
- Front assembly in 4 different Colors, Yellow / Red, Grey / Black, Black / Black and aluminium finish

Front Mounting

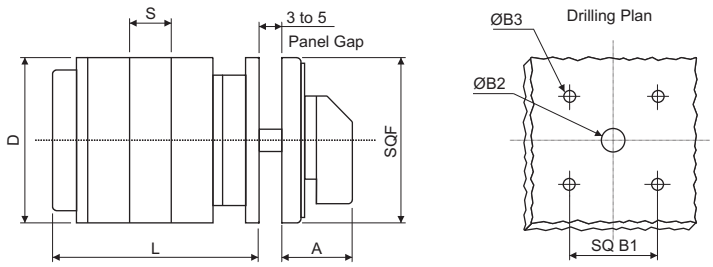

Length L = No of Stages of Prog x S + W

6/10 Amps by default B13 mounting 48 x 48 mm only

Quote B13 for next bigger size front plate

Type	A	B1	B2	B3	D	F	S	W	Max
S6/S10/TP6/TP10/SL6/SL10 (48x48 mm) - B13	28	36	12	4.5	38	48	9.5	18.5	12
S16/TP16/RT16/TP20/RT20	28	36	12	4.5	58	48	12	26	21
S25/S32/RT25/RT32	35	48	12	5.5	64	64	15	27	18
S40/S63/RT40/RT63	44	68	15	5.5	95	88	21	33	12
S80/S100/S125	44	68	15	5.5	118	88	26	40	10
S200	44	68	15	5.5	99	88	32	40	10
S400	44	68	15	5.5	99	88	64	40	4

B19/B14

IP65 protection from front

Features:

- Single hole mounting with std dia 22.5 mm
- Eliminates the need for screws / hardware for Quick-Fit single hole panel fixing
- Easy termination
- Available upto 32 A

Single Hole Mounting (22.5 mm cutout)

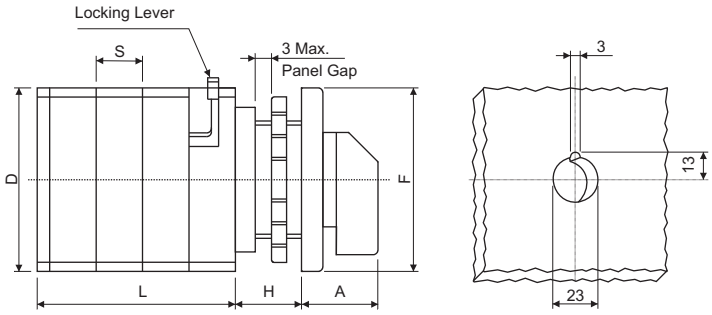

Length L = No of Stages x S + W

Drilling Plan

Quote B14 for next bigger size front plate (available for 6/10 Amps. only)

Type	Code	A	D	F	S	H	W	Max
S6/S10/TP6/TP10	B19	25	38	32	9.5	13.5	28.5	10
	B14	27	38	48	9.5	13.5	28.5	10
S16/TP16/RT16/TP20/RT20	B19	32	58	48	12	13	36	8
S25/S32/RT25/RT32	B19	32	64	48	15	13	37	6

All dimensions in mm.

B33

IP55 protection from front

Pad Lockable Mounting

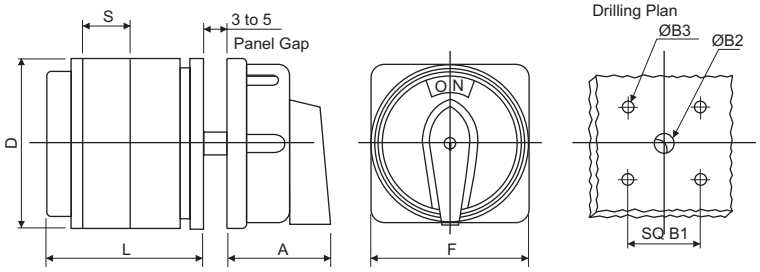

Length L = No of Stages x S + W

F-48 mm with B1-36 mm also available on request for 16, 25, 32 Amps

Features:

- Four hole round padlockable mounting
- Secure with max. 3 padlocks in OFF position prevents switching ON by unauthorized personnel
- Suitable for switches only with 90° switching angle

Type	A	B1	B2	B3	D	F	S	W	Max
S16/TP16/RT16/TP20/RT20	44	36	12	4.5	58	65	12	26	6
S25/S32/RT25/RT32	44	36	12	4.5	64	65	15	27	6
S40/S63/RT40/RT63	48	68	15	5.5	95	95	21	33	6
S80/S100/S125	48	68	15	5.5	118	95	26	40	6
S200	48	68	15	5.5	99	95	32	40	6
S400	48	68	15	5.5	99	95	64	40	3

B30

IP55 protection from front

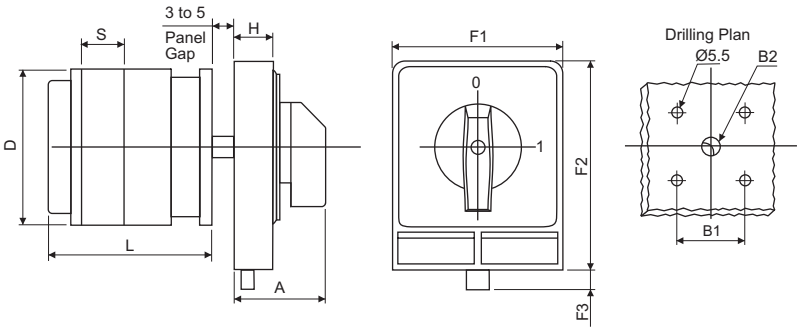

Length L = No of Stages x S + W

Type	A	B1	B2	D	F1	F2	F3	H	S	W	Max
S16/TP16/RT16/TP20/RT20	35	48	12	58	76	104	12	23	12	26	6
S25/S32/RT25/RT32	35	48	12	64	76	104	12	23	15	27	6
S40/S63/RT40/RT63	44	68	15	95	99	128	15	25	21	33	6
S80/S100/S125	44	68	15	118	99	128	15	25	26	40	6
S200	44	68	15	99	99	128	15	25	32	40	6
S400	44	68	15	99	99	128	15	25	64	40	3

All dimensions in mm.

B63

IP40 protection from front

Features:

- Knob / Handle operatable Switch with key lockable assembly prevents switching by unauthorized personnel
- Key lock / Key removable only in OFF position by default, key lockable and removable in any other position to be specified
- Lock assembly can also be provided on any side
- Common key for all Switches

Key Lockable

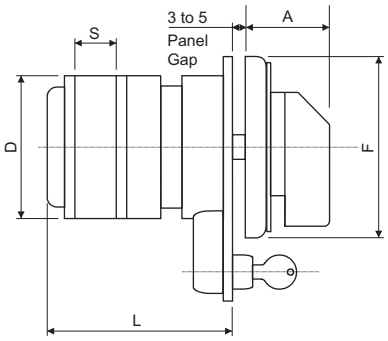

Length L = No of Stages x S + W

Drilling Plan

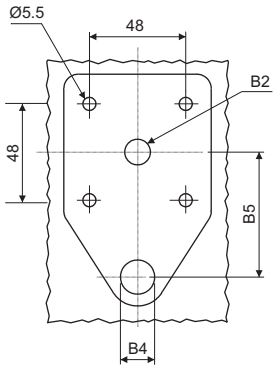

Type	A	B2	B4	B5	D	F	S	W	Max
S16/TP16/RT16/TP20/RT20	35	13	23	43.5	58	64	12	45	21
S25/S32/RT25/RT32	35	13	23	43.5	64	64	15	45	15
S40/S63/RT40/RT63	44	13	23	43.5	95	64	21	47	10

B17

IP55

Features:

- Switch mounted in ABS enclosure
- Provides protection from dust and hazardous material with regular Front Plate and Knob
- Suitable for all switching angles
- Knob / Handle operable
- IP65 can be given on request

Quote B31 (B17 Enclosure and B33 Round Padlock) only for Isolator ON/OFF Switches

Enclosure

LR/HR Model

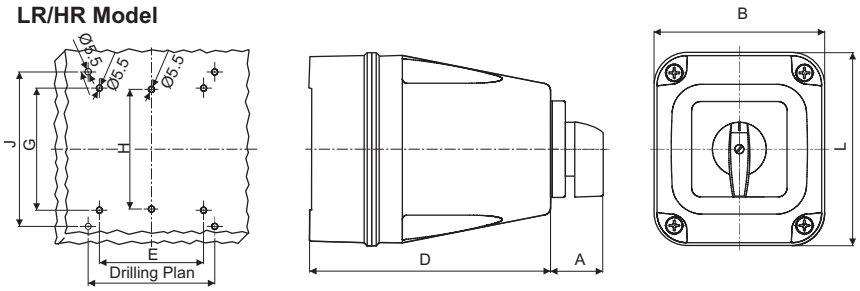

SM, M

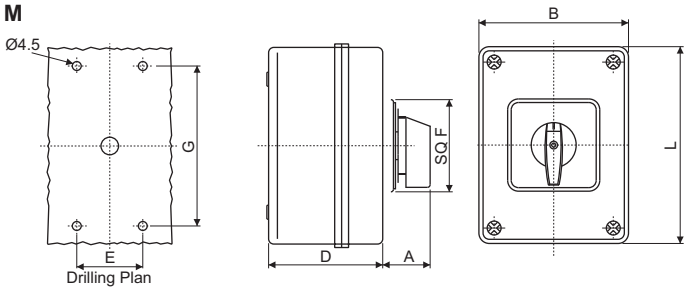

Type	Box Type	A	L	B	D	E	G	Stages
S6/S10/TP6/TP10	SM	28	125	100	72	80	115	4
S16/TP16/RT16	SM	28	125	100	72	80	115	3
S16/TP16/RT16	M	28	175	125	90	105	155	4
S25/S32/RT25/RT32	SM	35	125	100	72	80	115	2
S25/S32/RT25/RT32	M	35	175	125	90	105	155	4
S40/S63/RT40/RT63	M	44	175	125	90	105	155	2

Type	Code	A	L	B	D	E	G	H	I	J	Stages
S25/S32/RT25/RT32	LR	38	130	115	161	87	102	100	-	-	5
S40/S63/RT40/RT63	HR	46	180	155	220	120	100	-	122	147	5

All dimensions in mm.

M17

Metal Enclosure

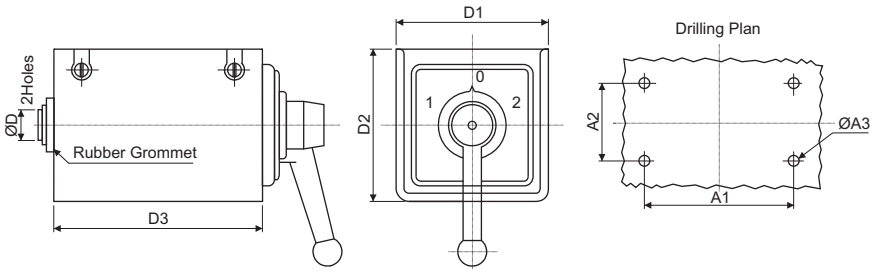

Isolators by default with knob only

Features:

- Switches mounted in sheet metal enclosures provide protection from hazardous environment
- Knob / Handle operatable
- Suitable for Switches upto 32 A

Type	A1	A2	A3	D1	D2	D3	Max
S6/S10/TP6/TP10	70	60	6	85	89	98	4
S16/TP16/RT16/TP20/RT20	70	60	6	85	89	98	4
S25/S32/RT25/RT32	70	60	6	85	89	98	4
16A Forward/OFF/Reverse Only	70	60	5	75	75	110	-

B02

Rear Mounting

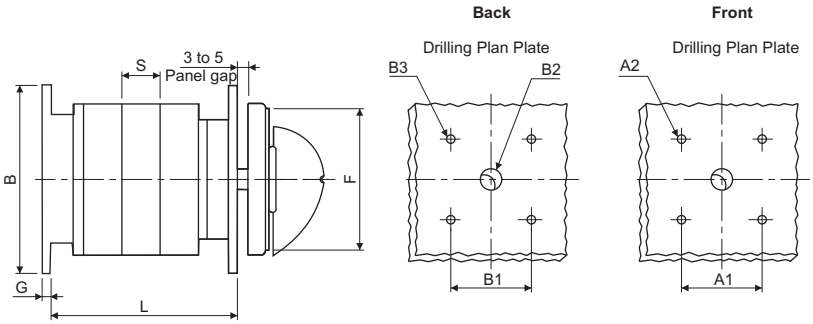

Length L = No of Stages x S + W

Features:

- Four hole base mounted on rear side of the panel
- Knob / Handle operable
- Can also be used for panel / door mounting

Type	A	A1	B1	B2	B3	F	B	G	S	W	Max
S6/S10/TP6/TP10	28	36	36	9	4.5	48	48	4.5	9.5	26	12
S16/TP16/RT16/TP20/RT20	28	36	48	12	4.5	48	64	3.5	12	30	12
S25/S32/RT25/RT32	35	48	48	12	4.5	64	64	3.5	15	31	8
S40/S63/RT40/RT63	43	68	68	15	5.5	88	88	5	21	41	6
S80/S100/S125	43	68	100	15	5.5	88	124	5	26	48	6
S200	43	68	83	15	5.5	88	104	5	32	48	6
S400	43	68	83	15	5.5	88	104	8	64	48	3

All dimensions in mm.

B21

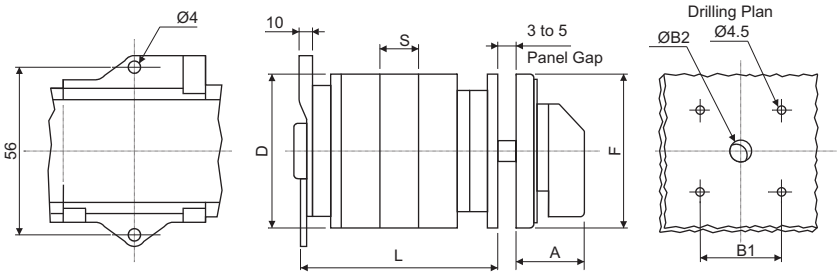

Length L = No of Stages x S + W

Features:

- Snap mounting base on DIN EN50022 (Omega) Rail 35 mm and 1.2 mm thick or two hole rear mounting
- Provides easy termination
- Can also be used for panel / door mounting

Type	A	B1	B2	D	F	S	W	Max
S6/S10/TP6/TP10	28	36	9	38	48	9.5	28.5	10
S16/TP16/RT16/TP20/RT20	28	36	12	58	48	12	37	12
S25/S32/RT25/RT32	35	48	12	64	64	15	38	8

B42

Door Interlock

IP55 protection from front

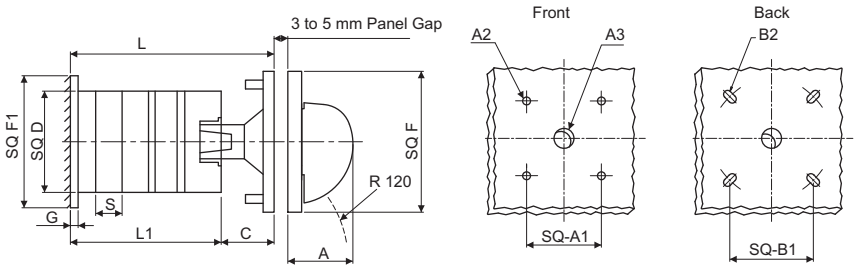

Length L = No of Stages x S + W
L = L1 + C

IP55 protection from front

Features:

- Mounted on rear side of the panel and operated from the front door
- Door inter / lockable mechanism and panel door opens only in OFF position
- Provides safety feature
- Knob / Handle operable

Quote B41 for door to be opened in both positions without door interlock

Type	A	A1	A2	A3	B1	F	B	G	C	N	S	W	Max
S16/TP16/RT16 TP20/RT20	35	48	4.5	15	48	64	64	3.5	25	22	12	54	8
S25/S32/RT25/RT32	35	48	4.5	15	48	64	64	3.5	25	22	15	57	8
S40/S63/RT40/RT63	44	68	5.5	18	83	88	104	5	27	26	21	66	6
S80/S100/S125	44	68	5.5	18	100	88	124	5	27	26	26	72	6
S200	44	68	5.5	18	83	88	104	5	27	26	32	72	6
S400	44	68	5.5	18	83	88	104	8	27	26	64	72	3

All dimensions in mm.

B03

Standard Mounting-Spring Return

(Square Latching Mechanism)

IP55 protection from front

Features:

- Standard 4 hole front panel mounting pistol grip handle operable
- Suitable for 45° / 60° only
- Advanced special star/spring design on latching provides guaranteed spring return operation

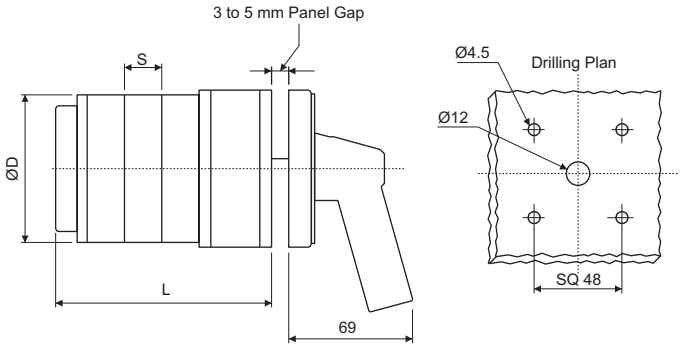

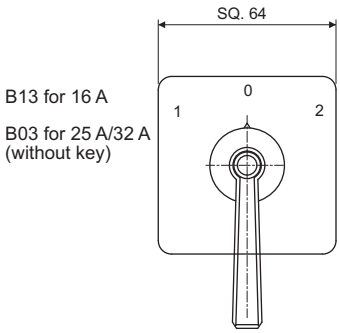

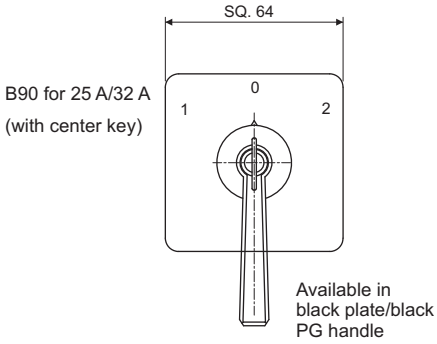

For B03 without key & for B90 with center key

Type	L (No. of Stages)						
	1	2	3	4	5	6	7
S16/TP16/RT16 (B13)	52.5	64.5	76.5	88.5	100.5	112.5	124.5
S25/S32/RT25/RT32	55.5	70.5	85.5	100.5	115.5	130.5	145.5

All dimensions in mm.

Knobs and Handles

Knobs / Handle Colours RED BLACK

TD - Tear Drop

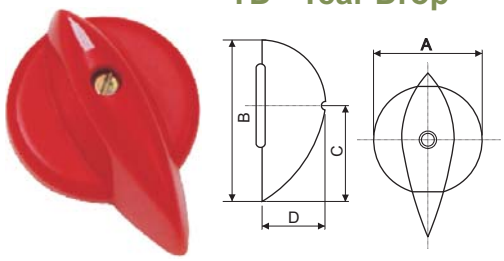

Code - TD	A	B	C	D
S6/S10/TP6/TP10	27	41	25	21
S16/TP16/RT16	27	41	25	21
S25/S32/RT25/RT32	36	51	31	25
S25/S32/RT25/RT32	50	70	42	33

FL - Flag Knob

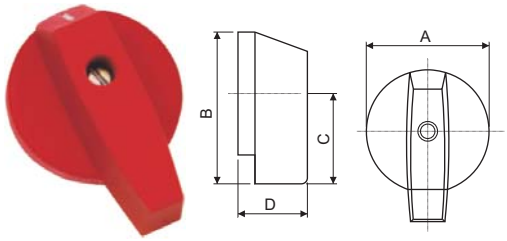

Code - FL	A	B	C	D
S6/S10/TP6/TP10	17	23	13.75	19
S16/TP16/RT16	27	38	24	23
S25/S32/RT25/RT32	27	38	24	23
S25/S32/RT25/RT32	50	68	42.5	32

PG - Pistol Grip Handle

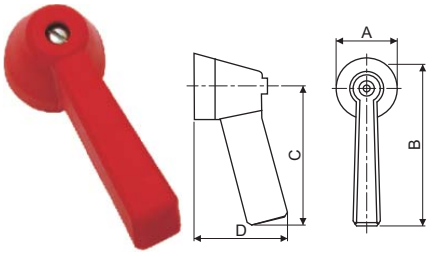

Code - PG	A	B	C	D
S16/TP16/RT16/TP20/RT20	36	102	82	56
S25/S32/RT25/RT32	36	102	82	56
S40/S63	36	102	82	56

BG - Ball Grip Handle

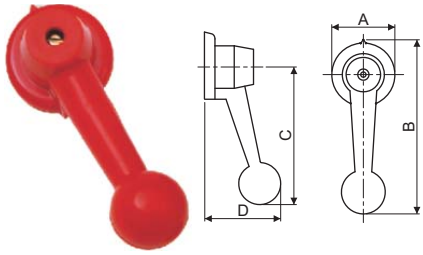

Code - BG	A	B	C	D
S16/TP16/RT16/TP20/RT 20	36	100	67	45
S25/S32/RT25/RT32	36	100	67	45
S40/S63	36	100	67	45

LV - Lever Handle

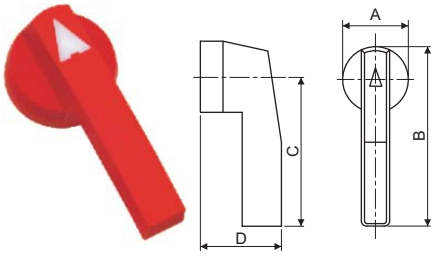

Code - LV	A	B	C	D
S80/S100/S125	50	115	90	45
S200/S400	50	115	90	45

All dimensions in mm.

Extended Terminals

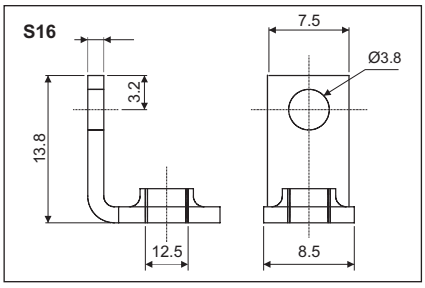

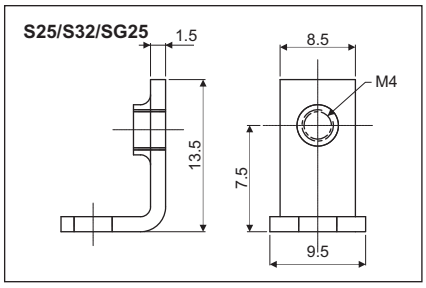

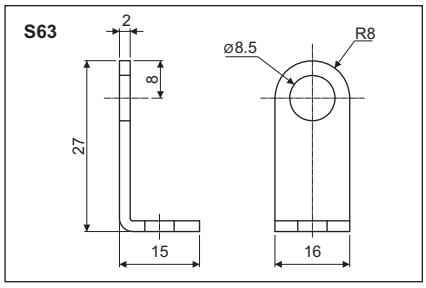

Supplied as optional for S40 and S63 on request

Extended Terminals - Always mounted on Switch

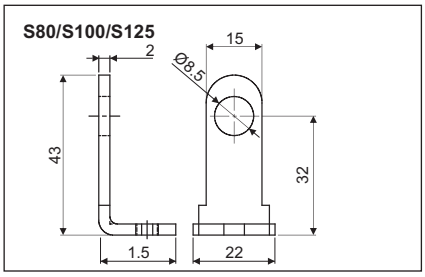

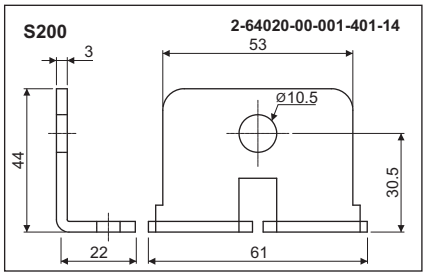

Always mounted on switch

Push on Terminals

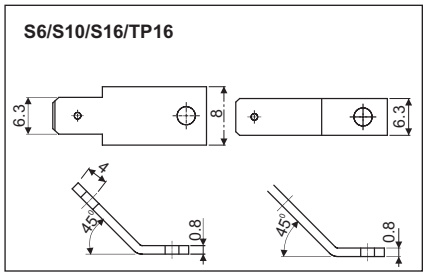

Mating terminal socket code no : 1653

Front Plate

Standard Style	Frame Size	Bigger Style
Current Ratings 6/10 Amps	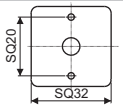	**Current Ratings** ---
16/20 Amps	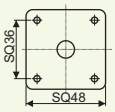	6/10 Amps
25/32 Amps	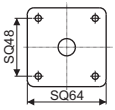	16/20 Amps
S40 Amps & above	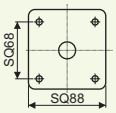	25/32 Amps
—	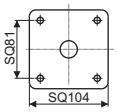	S40 Amps & above

Special Front Plates		
10 Amps 16 Amps 20 Amps	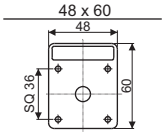	---
25/32 Amps	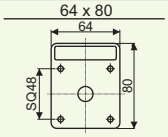	16/20 Amps

All dimensions in mm.

Protection Covers (Shrouds)

S-Series

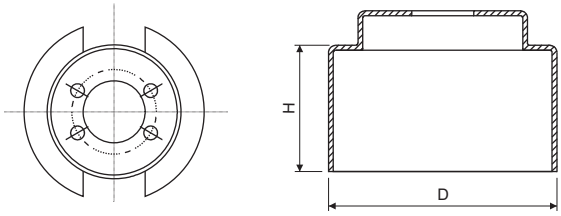

Type	ØD	H	
		2 Stage	3 Stage
S6/S10	$43^{\pm 0.2}$	25	34.5
S16/S25/S32	$69^{\pm 0.2}$	35	50
S40/S63	$95^{\pm 0.2}$	54	75

Other special size mounting plates at Front or Rear can be supplied against requirement.

Rectangular

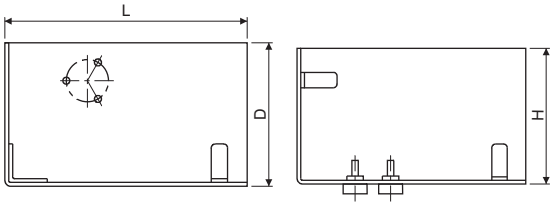

Type	L	D	H	No. of Stages
S40/S63	210	200	73	2
	210	200	94	3
S80 to S200	175	110	115	2
	210	200	100	2

In case of fixing at site use supplied hardware only.

The switch design and construction gives flexibility for making customized programme within a very short period. Basically an engineer trying to specify the customized programme should concentrate on the following points:

(a) Number of operating positions of switch handle.

(b) Total number of Contacts required.

(c) Contact closing sequence of all the contacts required in various positions of handle.

Note: Each position should be identified and Script plate marking required in those positions should be mentioned.

(d) The latching angle (angle between positions) Standard latching / switching angles are 600, 900, 450 & 300.Spring return are also possible for 450 & 900 switching angle.

(e) Total number of contacts can be decided based on the actual need. You may arrange the contacts to your convenience and number them as 1/2, 3/4, 5/6...etc.. While making the switch, we may rearrange the contacts to use solid jumpers so as to avoid loose wire jumpers.

(f) Fill up the programme sheet by marking 'X' at places where contacts have to Close (NC). Also ensure to specify the Ampere Rating, Mounting Style, Switching angle, Script Plate markings, Terminal marking & Lockable Position (If any).

For example, refer the sample customized programme sheet of a bedroom switch having 3 contacts controlling a tube-light, fan & night lamp.

Note: The above construction carries a five digit number starting with (7xxxx) alloted by us .This number alone is sufficient for future correspondence & further ordering.

All dimensions in mm.

Customised Programme Formation

Front Plate	Programme Number	7 3 0 3 7

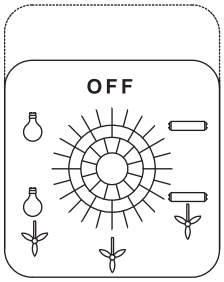

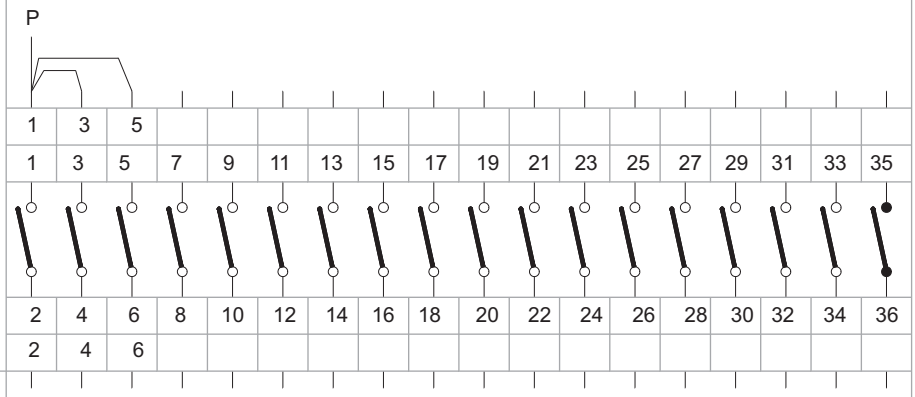

Switching Angle 60°

Switching Positions

			1	3	5	7	9	11	13	15	17	19	21	23	25	27	29	31	33	35
	OFF	1																		
		2																		
		3																		
		4																		
	TUBE	5	X																	
		6																		
		7																		
		8																		
	TUBE & FAN	9	X	X	X															
		10																		
		11																		
		12																		
	FAN	13																		
		14																		
		15																		
		16																		
	FAN & LAMP	17		X	X															
		18																		
		19																		
		20																		
	NIGHT & LAMP	21			X															
		22																		
		23																		
		24																		

Locked Position × × Contact Closed ×—× Contact Closed Without Interruption Spring Return

1 Switch Type	S 16		2 Mounting Form	BO3	3 Stop	with	without
							X
4 Front Plate	Type	Colour	7 Optional Extras				
	SO	Yellow					
5 Marking							
6 Handle	Type	Colour	Customer			Date	
	Tear Drop	Red					
Customer Code No.							

Ordering Code Information

Programme Code					Type		Ampere		Mounting			Knob			Color	
Example:- 6	1	1	9	7	S		E		B	O	3	T	D		Y	R

Programme Selector Table

Programmes	Prog Code
Isolators	Page 5
Changeovers with OFF	Page 6
Changeovers without OFF	Page 7
Multistep with OFF	Page 8
Multistep without OFF	Page 9
Instrumentation Switches	Page 10
Motor Control Switches	Page 12
Gang Switches	Page 14
Control Switches	Page 15

Mounting Selection

For Mounting Styles
Refer Table on Page 16

Type Selection

Type	Code	Possible Amps
S-Series	S	6 to 400 A
Touch Proof	T	6 to 16 A
Rear Termination	R	16 to 63 A
DC Switches	D	16 to 500 A
Phase Selector only for 1 pole 3 way with OFF	P	25 to 63 A

Ampere Selection

Ampere	Code
6	A
10	B
16	C
20	D
25	E
32	F
40	G
50	H
63	I
80	J
100	K
125	L
160	M
200	N
250	O
300	P
400	Q
500	R
600	S
800	T

Knob / Handle Selection

Code - TD	Code - FH	Code - PG	Code - BG	Code - LV
				
Tear Drop	Flag Knob	Pistol Grip	Ball Grip	Lever Handle

Color Combination Selection Table

Code - YR	Code - GB	Code - BB	Code - AB
			
Yellow Front Plate Red Knob	Grey Front Plate Black Knob	Black Front Plate Black Knob	Aluminum Foil with Black Knob

Breaker Control Switches

Under this 3 types are widely used
a) Spring return
b) Lost Motion contact (LMD)
c) Sequence Locking (Two consecutive movement in one direction arrested)

All the above can also be with external KEY and LOCK arrangement.

In SPRING RETURN type the handle is always returns to NEUTRAL position and does not stay in other two
positions, when the handle returns to Neutral, Main/TRIP contact will be in open condition.

In LMD, the contact block is divided into two, as main contacts and LMD contacts. LMD contacts will be closed when the handle moves to CLOSE side/TRIP side and the contact closing will be retained even though the handle is returned to NEUTRAL by virtue of Spring Return nature. When the handle is rotated in opposite direction only then LMD contact will open.

Thus the LMD mechanism enables the Switch to have a memory feature of the previous operation, which is considered to be very essential for circuit breaker applications.

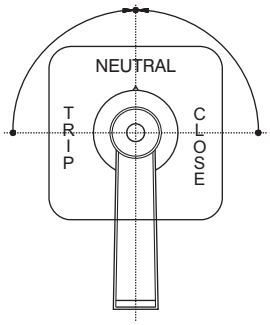

- Spring Return to Neutral Position from both sides
- Memory feature of previous operation (LMD)
- Permits only one Close operation (sequential lock)

In case of sequence lock, it acts like a mechanical interlock in the switch not permitting two consecutive 'CLOSE' operations. When you turn the handle to CLOSE position and handle will be back to NEUTRAL due to Spring Return action. Again the handle movement on the CLOSE side will be locked. When the handle is moved to TRIP position only then rotation to CLOSE position is permitted.

As indicated, all the above feature models can also be supported with external lock & key arrangement with key lockable and removable only at NEUTRAL position. Handle shall not be turned when the key is in lock condition.

Description		Unit	S25	S32
Rated Operational Voltage	Ue	V AC	690	690
		V DC	250	250
Resistance to Surge Voltage	Uimp	kV	6	6
Rated Uninterrupted Current	Ith	A	32	40
Rated Operational Current Pilot Duty AC15	**Ie**			
220-240 V AC		A	8	14
380-440 V AC		A	5	6
Short Circuit Protection HRC Fuse Size		A	25	32
Rated Short Circuit		kA	10	10
Terminal Cross Section				
Rigid Wire	min	mm^2	1.5	2.5
	max		4	6
Flexible Wire	min	mm^2	1	1.5
	max		2.5	4
Terminal Screw			M4	M4
Terminal Tightening Torque			1.2 Nm	1.2 Nm

General
Endurance :
Mechanical
100,000 operations at 300 cycles/hour

Electrical
10,000 operations at 120 cycles/hour
Operational Temperature 25°C to 55°C, frequency upto 5 kHz

Voltage	No. of Contacts in series	S25/SG 25				S32/SG32			
		Resistive Amps	Inductive L/R Amps			Resistive Amps	Inductive L/R Amps		
			10 msec	20 msec	40 msec		10 msec	20 msec	40 msec
50 V	1	20	20	15	6	25	25	18	8
	2	-	-	20	14	-	-	25	18
	3	-	-	-	20	-	-	-	25
125 V	1	3	2.5	1.5	1.0	5	3	2	1.2
	2	20	15	10	5	25	18	12	6
	3	-	20	20	10	-	25	v	12
250 V	1	1.0	0.5	0.3	0.2	1.2	0.6	0.4	0.3
	2	5	2	1.0	0.5	6	2.5	1.2	0.6
	3	20	10	4	1	25	12	5	1.2

Mounting Styles

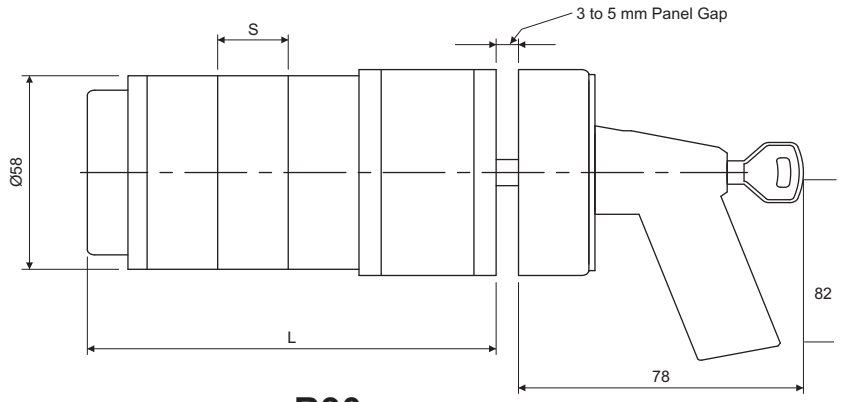

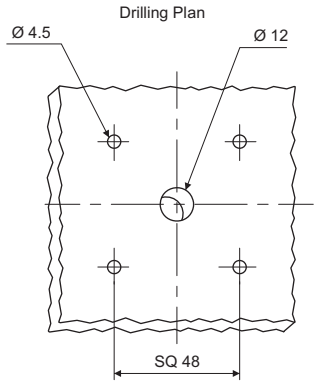

B03

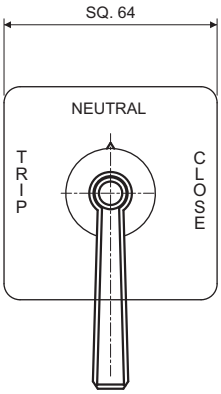

B90

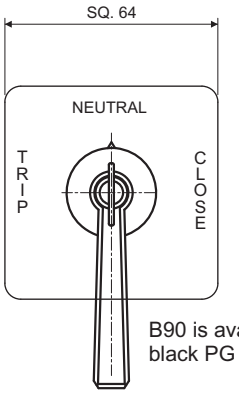

Shorter handle length also available on request

Type	L (No. of Stages)							X* LMD	Y* Sequential Lock
S25/S32	1	2	3	4	5	6	7		
	53	68	83	98	113	128	143	15	27.5

*LMD Dimension 'X' to be added

*Sequential Lock Dimension 'Y' to be added

B90 is available only black front plate & black PG handle type

Breaker Control Ordering Code

1		2		3		4		5		6		7		8	9	10		P	G		B	B

Example:-1 Q S L 1 1 E B 9 0 P G B B

25 Ampere Spring return TNC with 1 set of Main contact 1NO+1NC, 1 LMD contact in Trip position & 1 LMD contact in Close position with Sequential locking and Barrel lock mounting

Digit 1

No. of Main Contacts in Trip / Close Position	
Description	Code
1 NO+1 NC	1
2 NO+2 NC	2
3 NO+3 NC	3
4 NO+4 NC	4
5 NO+5 NC	5
6 NO+6 NC	6
7 NO+7 NC	7
8 NO+8 NC	8
9 NO+9 NC	9

Digit 2

Sequence Locking	Code
If required	Q
Not required	O

Digit 3

Latching Mechanism	Code
Spring Return	S
Stayput	C

All dimensions in mm.

Digit 4

LMD Contacts	Code
If required	L
Not required	D

Digit 5

No. of LMD Contacts in Trip Position	
Description	Code
1 Contact	1
2 Contact	2
3 Contact	3
4 Contact	4
5 Contact	5
6 Contact	6
If not required	0

Digit 6

No. of LMD Contacts in Close Position	
Description	Code
1 Contact	1
2 Contact	2
3 Contact	3
4 Contact	4
5 Contact	5
6 Contact	6
If not required	0

Digit 7

Ampere Rating	Code
25 Ampere	E
32 Ampere	F

Digit 8, 9, 10

Mounting	Code
Standard Front Mounting	B03
Barrel Lock with Center Key	B90

Cam Operated Rotary Switch

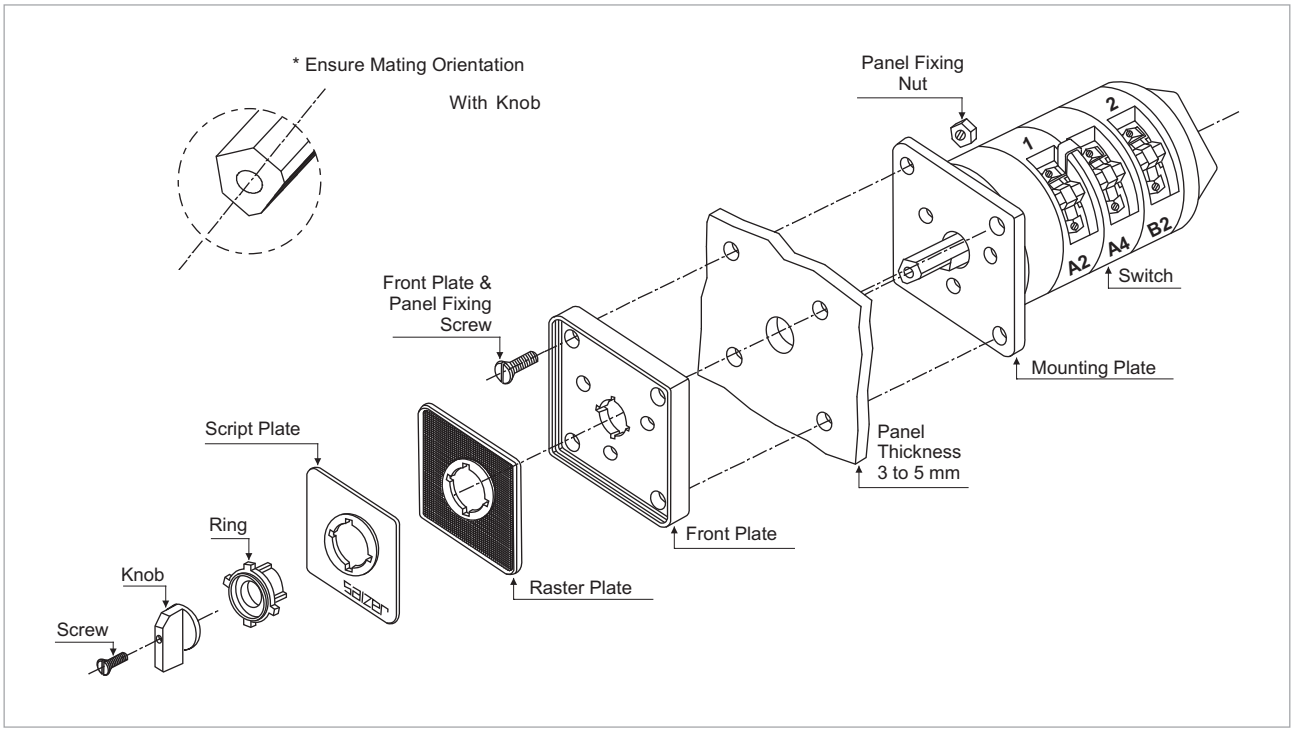

Breaker Control Switch

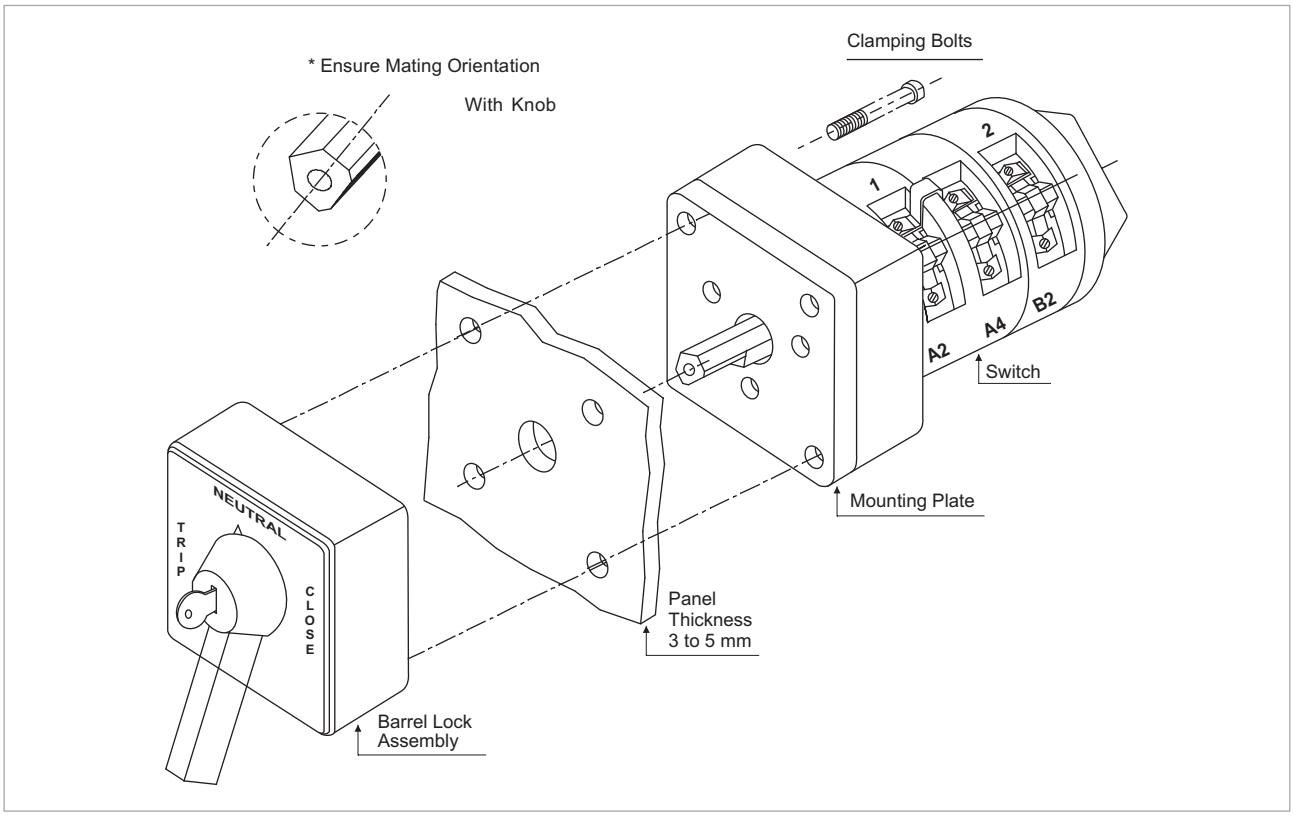

All dimensions in mm.

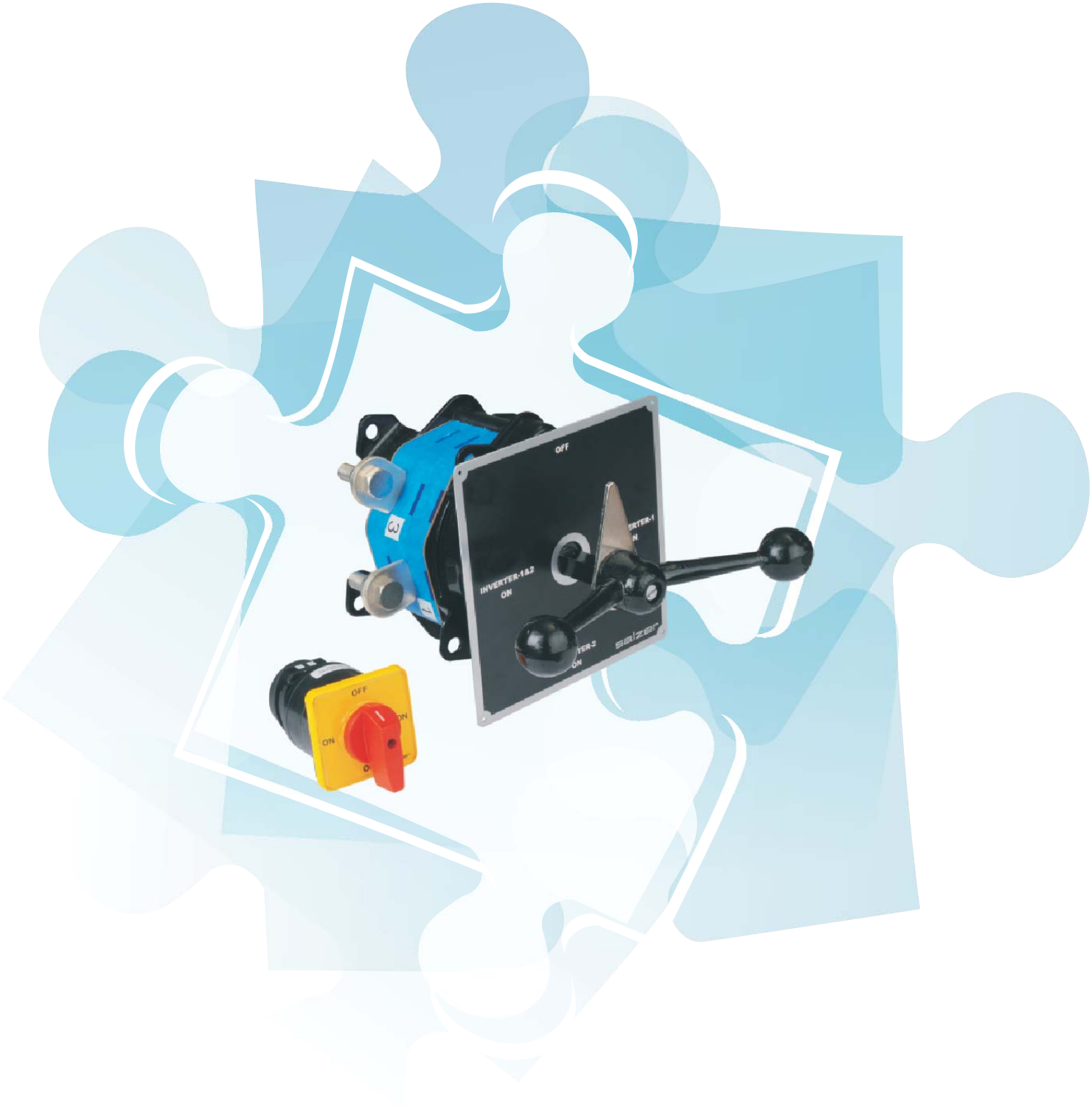

DC Rotary Switches

Construction and Features

D16 - D63

D Series Switches are designed for DC switching applications. These switches are constructed using snap action mechanism which provides 'Quick Make Quick Break' of contacts which is essential for DC switching. The contacts are of AgCdO, double break and butt type housed in a glass filled polyamide contact stage and are operated through cams for higher electrical endurance and smooth operation.

Suitable for 90 and 60 degree switching programmes and applicable for both AC and DC switching. Suitable switching programmes for Isolator, Changeover, Multistep and Gang Switches etc. are offered.

DC Switches D100 A - D500 A

Features:

- Housing made up of SMC material for rigidity and higher mechanical strength
- 'Wiping contacts' operations helps in dust free & self cleaning concepts
- Extended terminals for Bus bar / Aluminium cable connections
- Capstone handle operation for better leverage

Applications:

- D40R - Railway coaches lighting & fan circuits switching
- All DC power circuits - Railways, Telecommunications & Power plants
- Battery charging equipment

DC Ratings	Description		Unit	Rated Operational Current Ie				
				Switch Type				
				D 16	D 25	D 32	D 40	D 63
Rated on Interrupted Current (I th)			A	20	32	40	50	80
DC 22A L/R 2m sec								
Rated Operational Voltage	110 V	250 V	A	16	25	32	40	63
No of Series Contacts	1	2						
AC Ratings	AC3 Rating 3 Phase	380-440 V	HP	7	10	14	20	25
	AC21 Rating		A	16	25	32	40	63
General	Fuse Protection		A	16	25	32	40	63
	Short Circuit Through Fault Current		kA	5	10	10	20	20
	Terminal	[Rigid] min	mm^2	1.5	1.5	1.5	1.5	1.5
	Cross Section	[Flex] max	mm^2	4	4	6	10	16
	Tightening Torque		Nm	0.8	1.2	1.2	2	2
	Maximum Contact Stages			16	10	10	6	6

Description	Unit	D 100	D 200	D 300	D 400	D 500
Duty Rating - DC 22 A L/R 2m sec						
Operational Voltage	V DC	250	250	250	250	250
Voltage for AC Rating	V AC	460	460	460	460	460
Operational Current	A	100	200	300	400	500
Thermal Current (I th)	A	125	250	375	500	625
Switching Angle	Deg	90	90	90	90	90
Maximum Contact Stages		9	9	9	9	9

D16 D63

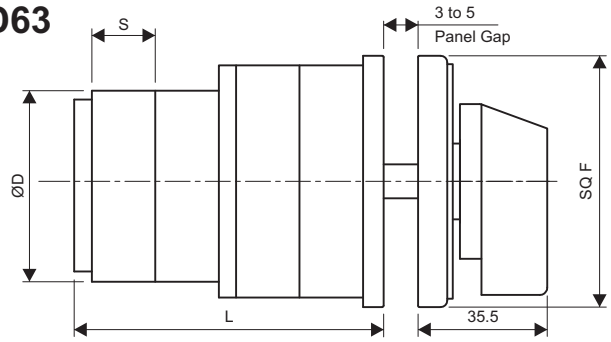

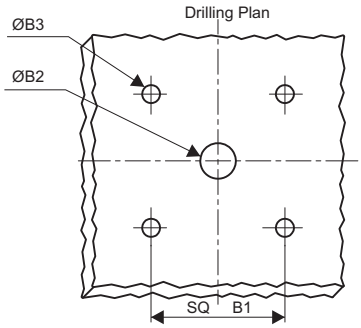

Type	B1	B2	B3	D	F	S
D16	48	12	5.5	50	64	12
D25/D32	48	12	5.5	50	64	15
D40/D63	68	15	5.5	70	88	21

Stages		1	2	3	4	5	6	7	8	9	10	11	12
Length L in mm	D16	62	74	86	98	110	122	134	146	158	170	182	194
	D25/32	65	80	95	110	125	140	155	170	185	200	215	230
	D40/63	69	90	111	132	153	174	195	216	237	258	279	300

D40 R

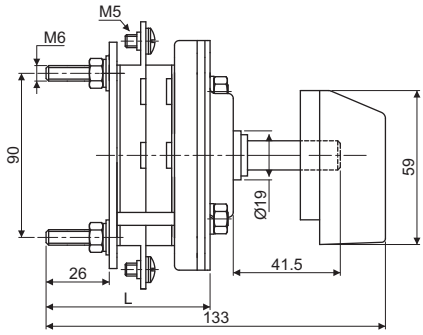

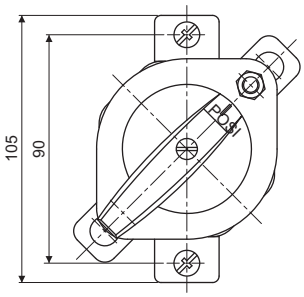

Type	S	S1	S2	Length L							
				1	2	3	4	5	6	7	8
D40	10	30.5	15	55.5	65.5	75.5	85.5	95.5	105.5	115.5	125.5

L = No. of Stages x S + (S+S)

D100

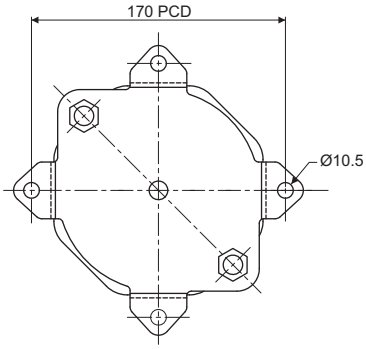

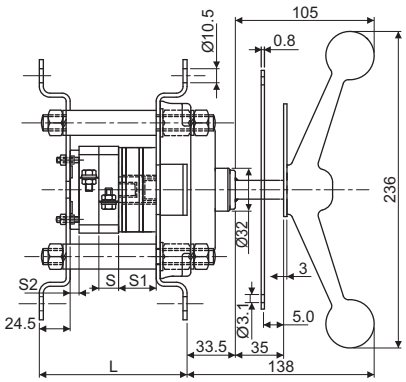

Type	S	S1	S2	Length L						
				1	2	3	4	5	6	7
D100	32	32	15	112	144	176	208	240	272	304

All dimensions in mm.

D200-D500

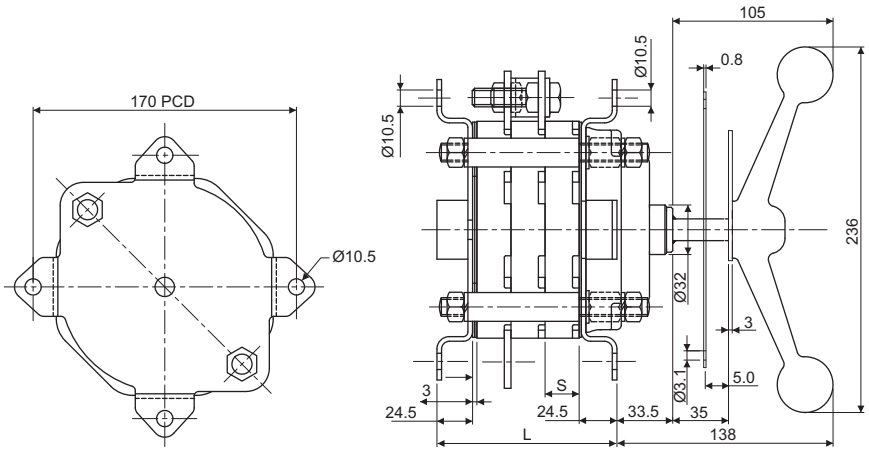

Type	S	Length L				
		3	4	5	6	7
D200-D500	22	117	139	161	183	205

D100 with Door Interlock

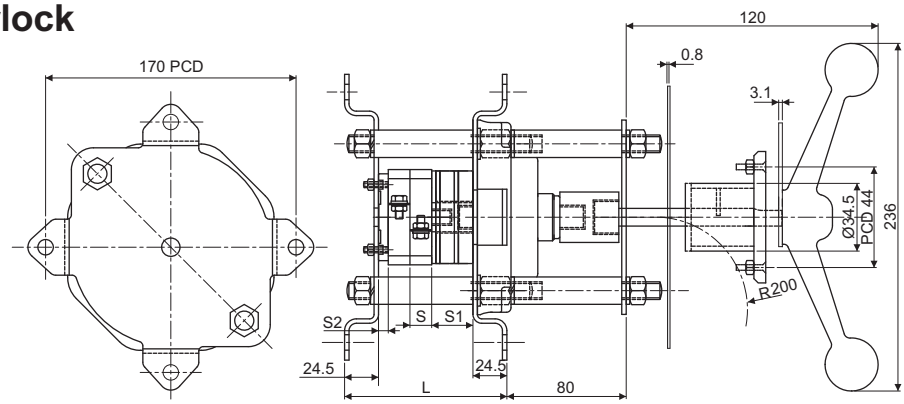

Type	S	S1	S2	Length L							
				1	2	3	4	5	6	7	8
D100	32	35	15	210	242	274	306	338	370	402	434

D200-D500 with Door Interlock

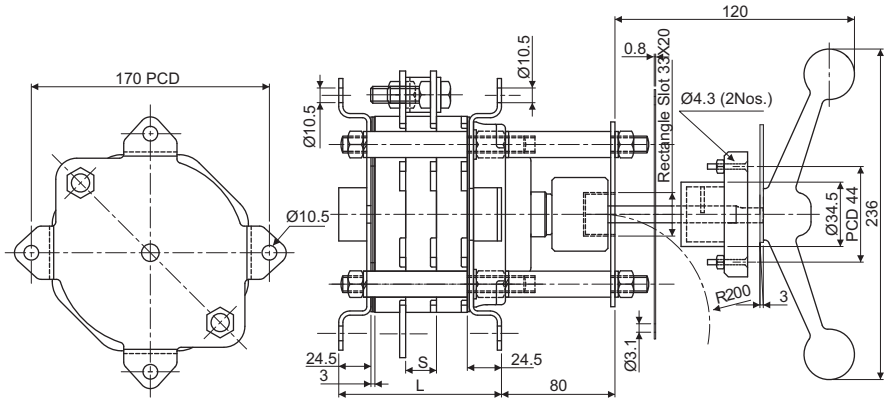

Type	S	Length L				
		3	4	5	6	7
D200-D500	22	197	219	241	263	285

All dimensions in mm.

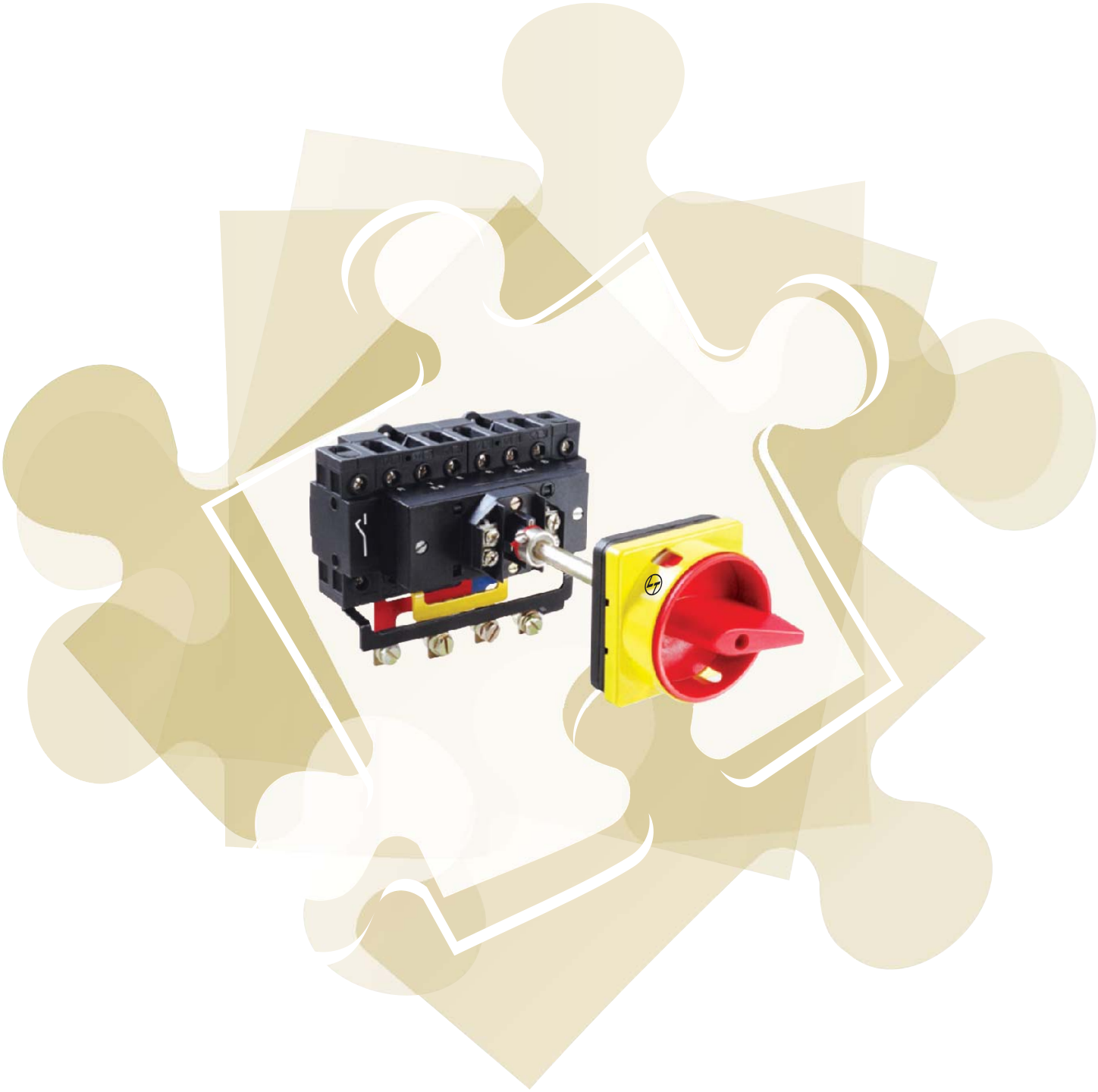

Load Break Switches

Technical Data

European Standard	IEC 60947-1 & 3, EN 60947, VDE 0660-107

Rating		Measure		LB116	LB120	LB225	LB232	LB240	LB263	LB4080	LB4100	LB4125
Rated Operational Voltage, U_e												
IEC/EN/VDE 50 Hz, AC		Volts	V	380-440	380-440	380-440	380-440	380-440	380-440	380-440	380-440	380-440
UL/CSA 50 Hz, AC		Volts	V	600	600	600	600	600	600	600	600	600
Main Switch: Isolating Voltage upto		Volts	V	750	750	750	750	750	750	750	750	750
Resistance to Surge Pulse Voltage, U_{imp}		Volts	kV	6	6	6	6	6	6	6	6	6
Rated Operational Current, I_e												
IEC/EN/VDE, AC 23 A		Amp	A	16	20	25	32	40	63	80	100	125
Short Circuit Size (IEC/EN/VDE)												
Max. Fuse Size (Type gL)		Amp	A	16	25	25	32	40	63	80	100	125
Rated fused short circuit current		Amp	kA	5	5	30	30	30	30	30	30	30
UL/CSA Power Rating: Manual Motor Control, Suitable as Disconnect												
DOL 50 Hz, AC	3 Phase, 3 Pole	120V	HP	1.5	1.5	3	3	5	7.5	5	7.5	7.5
		240V	HP	3	3	7.5	7.5	10	15	20	20	30
		480V	HP	7.5	7.5	15	20	20	25	30	30	40
		600V	HP	10	10	20	25	30	30	40	40	50
	1 Phase	120V	HP	0.5	0.5	1.5	2	3	3	3	3	3
		240V	HP	1.5	1.5	2	3	4	7.5	7.5	7.5	7.5
Short Circuit Capacity (UL/CSA)												
Max. Fuse Size		Amp	A	25	25	50	50	70	70	100	100	125
Fuse Rating, J Type		Amp	A	20	20	45	45	70	70	125	125	125
Rated Fused Short Circuit Current		Amp	kA	10	10	10	10	10	10	10	10	10
Terminal Cross Section												
Single/Multiple Strand Wire		Min-mm^2		1.5	1.5	1	1	4	4	6	6	6
		Max-mm^2		6	6	10	10	16	16	70	70	70
Fine-Strand Wire with Sleeve		Min-mm^2		0.5	0.5	0.75	0.75	2.5	2.5	4	4	4
		Max-mm^2		6	6	6	6	10	10	50	50	50
American Wire Gauge		AWG		12	12	8	8	6	6	1	1	1
Recommended Tightening Torque		Nm		0.8	0.8	1.7	1.7	2.0	2.0	2.5	2.5	2.5

Switches: LB225, LB232, LB240, LB263, LB4080, LB4100, LB4125

	1/L1 3/L2 5/L3 2/T1 4/T2 6/T3	1/L1 3/L2 5/L3 7 2/T1 4/T2 6/T3 8	9 1/L1 3/L2 5/L3 7 10 2/T1 4/T2 6/T3 8	1/L1 3/L2 5/L3 1/L1 3/L2 5/L3 2/T1 4/T2 6/T3 2/T1 4/T2 6/T3	7 1/L1 3/L2 5/L3 3/L2 5/L3 3/L2 7 8 2/T1 4/T2 6/T3 4/T2 6/T3 4/T2 8
	3 Pole	1 Pole + 1 Main Module	4 Pole + 1 Main Module	6 Pole	8 Pole
OFF ON	31300	31400	31500	31600	31800
ON OFF	31309	31409	31509	31609	31809

	1/L1 3/L2 5/L3 N 2/T1 4/T2 6/T3 N	N 1/L1 3/L2 5/L3 7 N 2/T1 4/T2 6/T3 8	1/L1 3/L2 5/L3 13 21 2/T1 4/T2 6/T3 14 22	13 21 1/L1 3/L2 5/L3 7 14 22 2/T1 4/T2 6/T3 8	N 1/L1 3/L2 5/L3 N N 2/T1 4/T2 6/T3 8	13 21 1/L1 3/L2 5/L3 13 21 14 22 2/T1 4/T2 6/T3 14 22
	3 Pole + 1 Neutral Module	4 Pole + 1 Neutral Module	3 Pole + 1 Auxilliary Module	4 Pole + 1 Auxilliary Module	3 Pole + 2 Neutral Module	3 Pole + 2 Auxilliary Module
OFF ON	31310	31410	31320	31420	31330	31340
ON OFF	31319	31419	31329	31429	31339	31349

Note: 6P and 8P for LB116 and LB120 are under development. Please refer to us

Switches: LB4080, LB4100, LB4125

	1/L1 3/L2 5/L3 2/T1 4/T2 6/T3	1/L1 3/L2 5/L3 7 2/T1 4/T2 6/T3 8	9 1/L1 3/L2 5/L3 7 10 2/T1 4/T2 6/T3 8	1/L1 3/L2 5/L3 1/L1 3/L2 5/L3 2/T1 4/T2 6/T3 2/T1 4/T2 6/T3	7 1/L1 3/L2 5/L3 3/L2 5/L3 3/L2 7 8 2/T1 4/T2 6/T3 4/T2 6/T6 4/T2 8
ON OFF	31309	31409	31509	31609	31809

	1/L1 3/L2 5/L3 N 2/T1 4/T2 6/T3 N	N 1/L1 3/L2 5/L3 7 N 2/T1 4/T2 6/T3 8	1/L1 3/L2 5/L3 13 21 2/T1 4/T2 6/T3 14 22	13 21 1/L1 3/L2 5/L3 7 14 22 2/T1 4/T2 6/T3 8	N 1/L1 3/L2 5/L3 N N 2/T1 4/T2 6/T3 N	13 21 1/L1 3/L2 5/L3 21 13 14 22 2/T1 4/T2 6/T3 22 14
ON OFF	31319	31419	31329	31429	31339	31349

B03

16 A-20 A

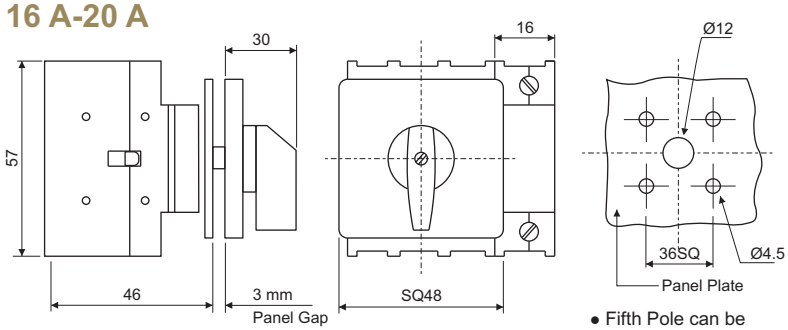

- Fifth Pole can be fitted on the other side of the switch

- 4 Hole front panel mounting
- Degree of protection : Front IP55

B19

16 A-20 A

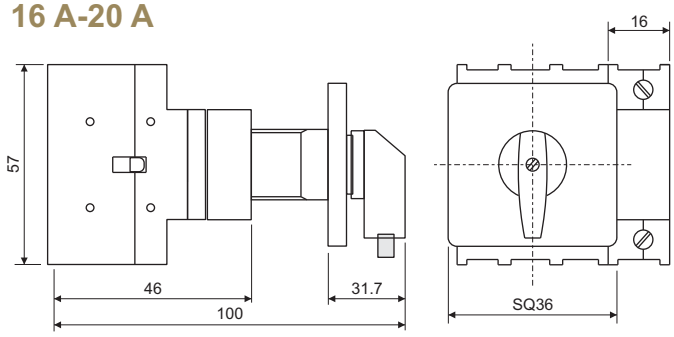

- Dia 22.5 mm, single hole panel mounting
- Degree of protection : Front IP55
- Switch with padlockable flag knob
- Maximum 1 padlock

B40

16 A-20 A

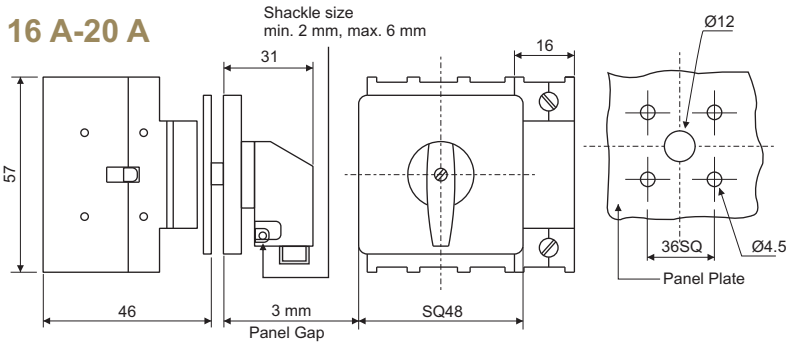

- 4 Hole, front panel mounting
- Degree of protection : Front IP55
- Switch with padlockable flag knob
- Maximum 1 padlock

B13

25 A-63 A

- Fifth Pole can be fitted on the other side of the switch

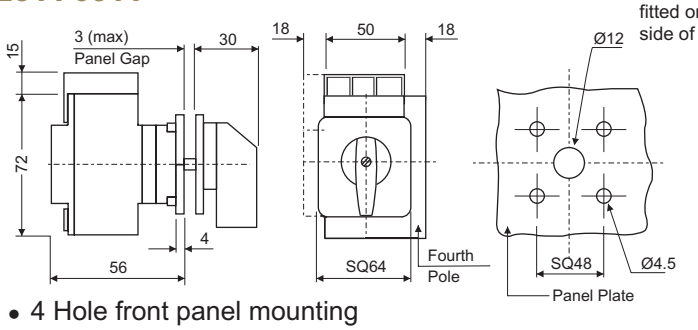

- 4 Hole front panel mounting
- Degree of protection : Front IP55

All dimensions in mm.

B30

25 A-63 A

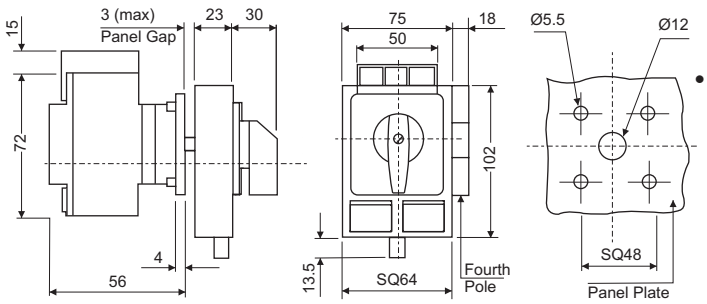

- Fifth Pole can be fitted on the other side of the switch

- 4 Hole front panel mounting
- Degree of protection : Front IP55
- Switch with rectangular padlocking device to prevent the switch from being switched ON by unauthorized personnel
- Max 4 padlocks

B33

25 A-63 A

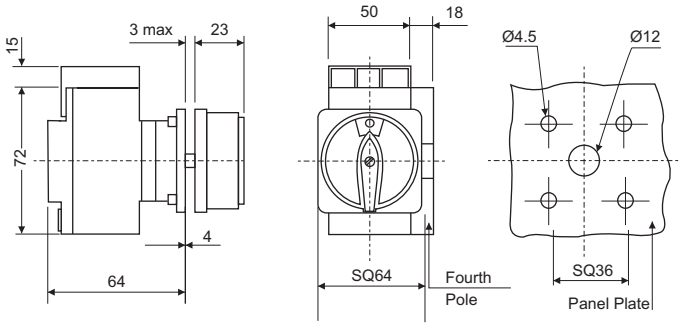

- Fifth Pole can be fitted on the other side of the switch

- 4 Hole front panel mounting
- Degree of protection : Front IP65
- Switch with round padlocking device to prevent from being switched ON by unauthorized personnel
- Max 3 padlocks

B63

25 A-63 A

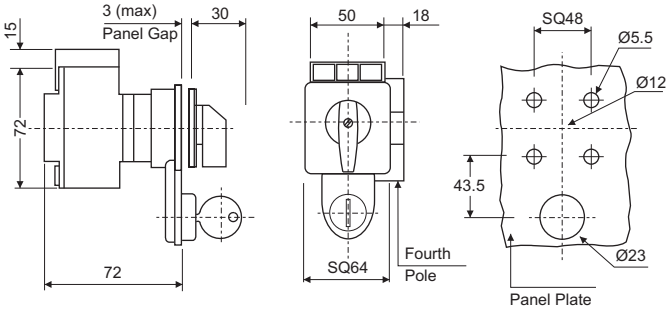

- Fifth Pole can be fitted on the other side of the switch

- 4 Hole front panel mounting
- Degree of protection : Front IP55
- Knob operated, keylock, key removable in OFF position (other options on request)

All dimensions in mm.

B23

- 2 Hole rear mounting
- Alternately snap mounting on DIN EN50022 rail (35 mm)
- Degree of protection : Front IP30

25 A-63 A

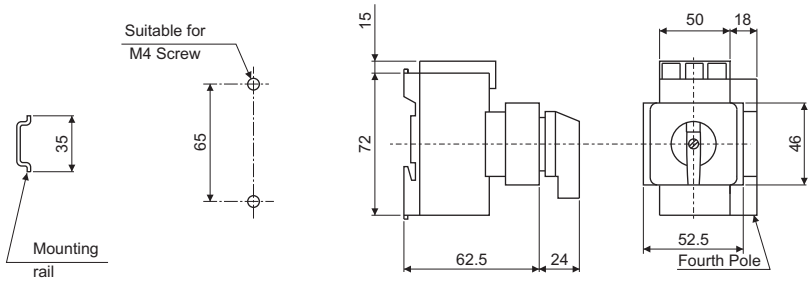

80 A-125 A

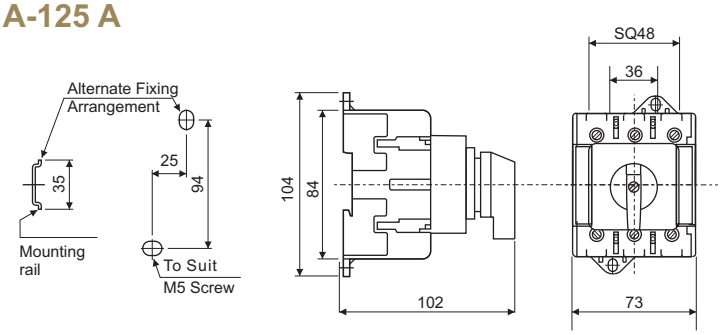

MB42

- 2 Hole rear mounting or snap mounting on DIN EN50022 rail (35 mm) can be operated from the front (door) - coupled with door mechanism
- Door interlock (Door openable only in OFF position)
- Degree of protection : Front IP55

16 A-20 A

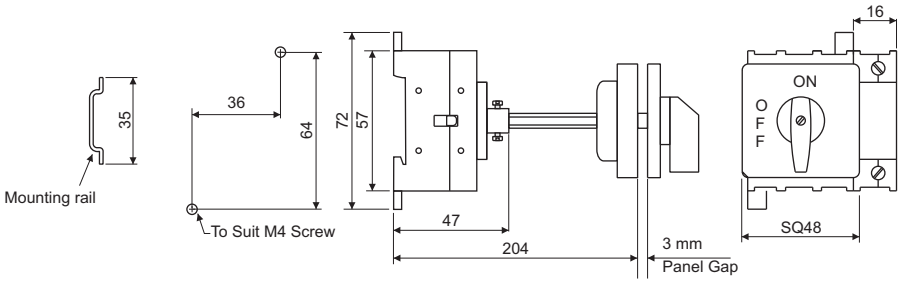

25 A-63 A

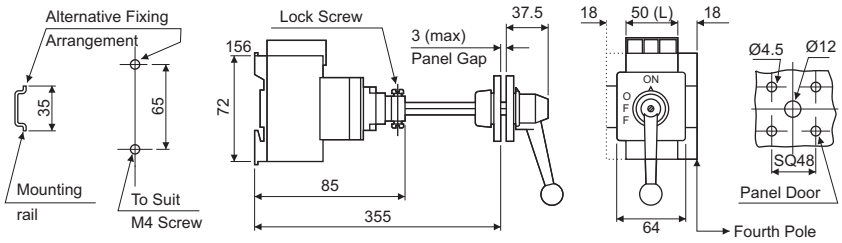

80 A-125 A

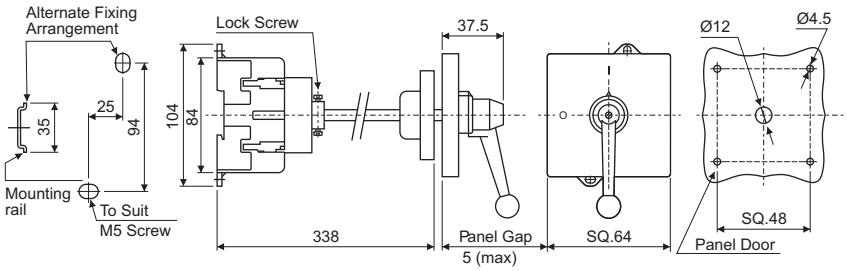

All dimensions in mm.

Rear Mounting

MB34

- 2 Hole rear mounting or snap mounting on DIN EN50022 rail (35 mm) can be operated from the front (door) coupled with door mechanism
- Door interlock (Door openable only in OFF position)
- Degree of protection : Front IP65
- Rigid metal shaft / switch assembly
- Switch with round padlocking device to prevent the Switch from being made ON by unauthorized persons
- Max. 3 padlocks as under :
  16 A-20 A : Max. 1 padlock
  25 A-63 A : Max. 2 padlocks
  80 A-125 A : Max. 3 padlocks

16 A-20 A

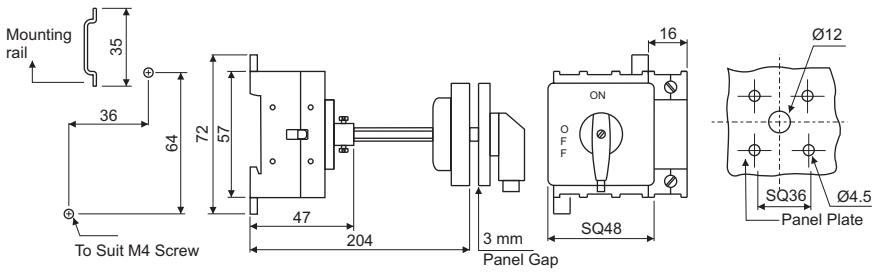

25 A-63 A

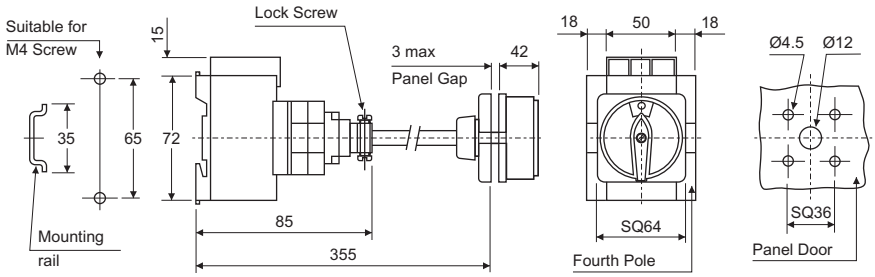

80 A-125 A

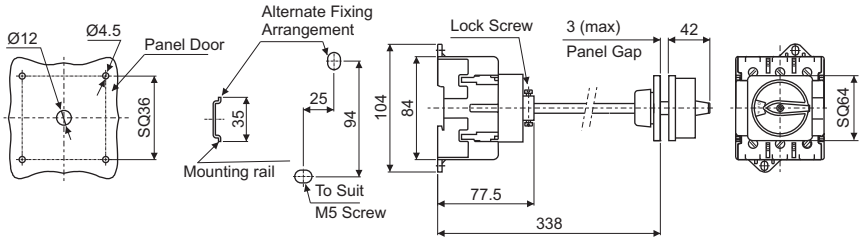

- Adjustable mounting by cutting the metal shaft to appropriate length, to suit panel height
- Specific length of shaft can be offered on request

All dimensions in mm.

B31SM

16 A-32 A

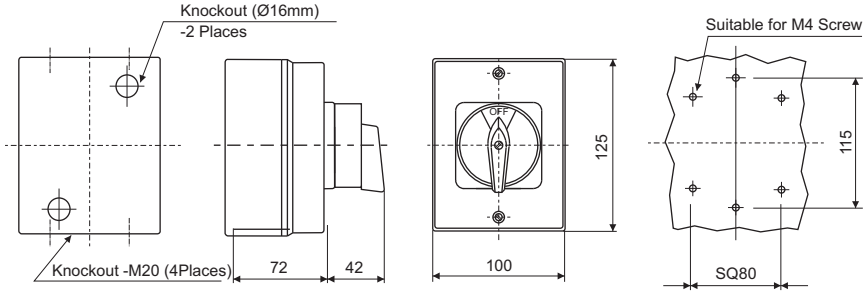

- Switch mounted in ABS / polycarbonate (optional) enclosure
- Round padlocking device (max. 3 padlocks) to prevent the switch from being made ON by unauthorized personnel
- Knob version available on request
- Switch rear mounted for easy connection
- Degree of protection : IP65
- Red / Yellow-handle colour for Main / Emergency switches
- Enclosure colour : Dark grey base and light grey cover
- Door Interlock

B31M

40 A-63 A

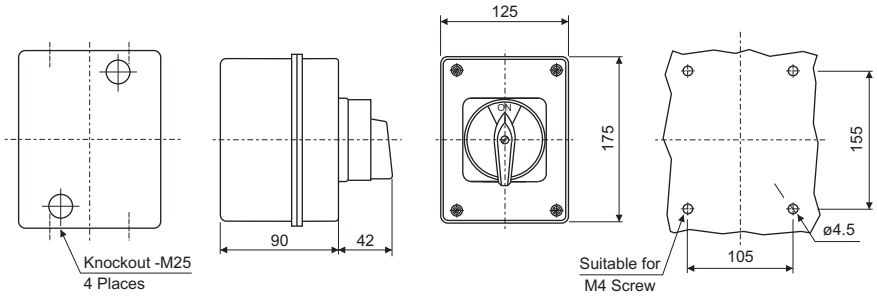

- Switch mounted in ABS enclosure, optional in polycarbonate
- Round padlocking device (max. 3 padlocks) to prevent the Switch from being made ON by unauthorized personnel
- Degree of protection : IP65
- Switch rear mounted for easy connection
- Red / Yellow-handle colour for Main / Emergency Switches
- Enclosure colour : Dark grey base and light grey cover
- Door Interlock

B31L

80 A-125 A

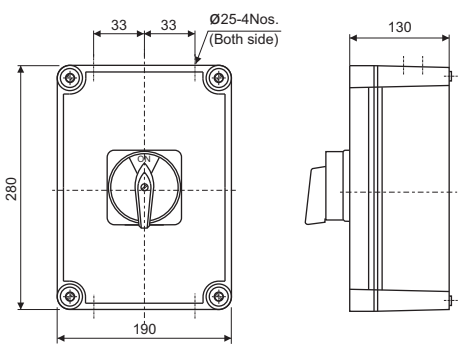

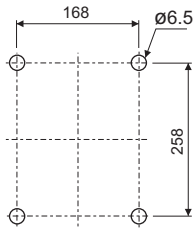

- Switch mounted in ABS / polycarbonate (optional) enclosure
- Padlocking device (max. 3 padlocks) to prevent the Switch from being made ON by unauthorized personnel
- Degree of protection : IP65
- Switch rear mounted for easy connection
- Red / Yellow-handle colour for Main / Emergency switches
- Interlock provided to open the lid only in OFF position
- Enclosure colour : Grey
- Door Interlock

All dimensions in mm.

Metal Enclosure Mounting

AB31S

16 A-20 A

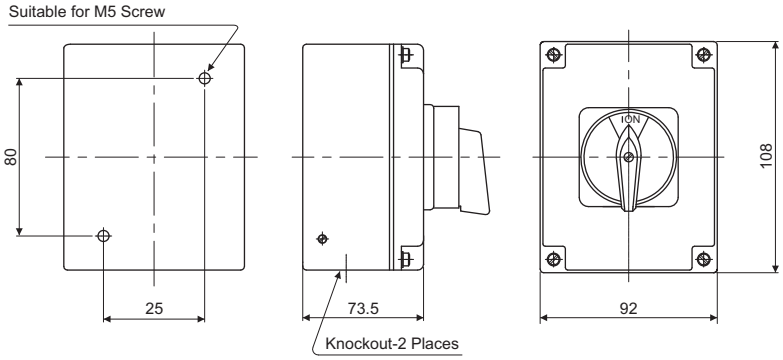

- Switch mounted in aluminium enclosure
- Round padlocking device (max. 3 padlocks) to prevent the switch from being made ON by unauthorized personnel
- Degree of protection : IP65
- Red / Yellow-handle colour for Main / Emergency switches
- Enclosure colour : Dark grey base and light grey cover
- Door Interlock

AB31M

25 A-63 A

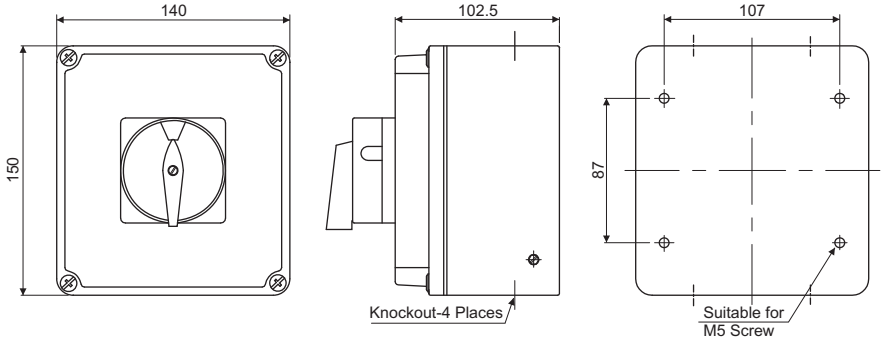

- Switch mounted in aluminium enclosure
- Round padlocking device (max. 3 padlocks) to prevent the switch from being made to ON by unauthorized personnel
- Degree of protection : IP65
- Red / Yellow-handle colour for Main / Emergency switches
- Enclosure colour : Dark grey base and light grey cover
- Door Interlock

AB31L

80 A-125 A

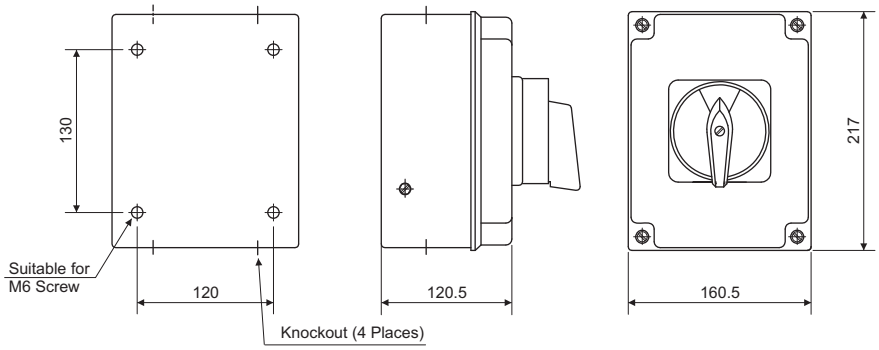

- Switch mounted in aluminium enclosure
- Round padlocking device (max. 3 padlocks) to prevent the Switch from being made ON by unauthorized personnel
- Degree of protection : IP65
- Red / Yellow-handle colour for Main / Emergency switches
- Enclosure colour : Dark grey base and light grey cover
- Door Interlock

All dimensions in mm.

SB31S

Upto 25 A

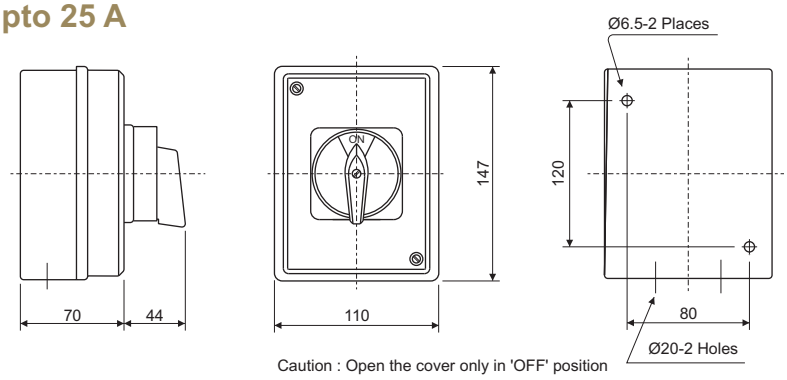

- Switch mounted in Steel enclosure
- Round padlocking device (max. 3 padlocks) to prevent the Switch from being made ON by unauthorized personnel
- Degree of protection : IP53*
- Knob version available on request
- Red / Yellow-handle colour for Main / Emergency switches
- Enclosure colour : Dark grey base and light grey cover
- Door Interlock

SB31M

32 A - 63 A

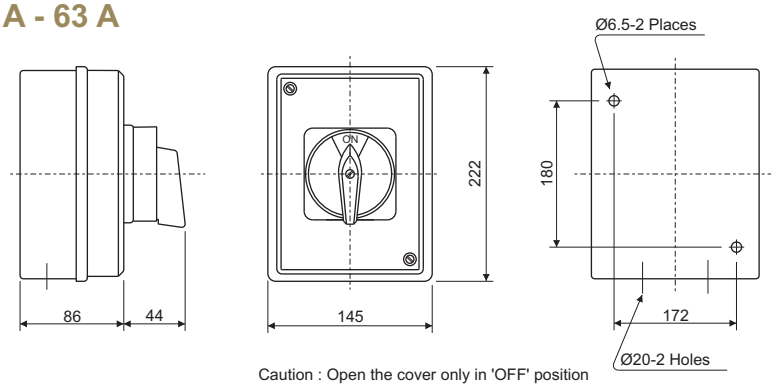

- Switch mounted in Steel enclosure
- Round padlocking device (max. 3 padlocks) to prevent the Switch from being made ON by unauthorized personnel
- Degree of protection : IP53
- Knob version available on request
- Red / Yellow-handle colour for Main / Emergency switches
- Enclosure colour : Dark grey base and light grey cover
- Fourth pole can be added
- Door Interlock

SB31L

80 A-125 A

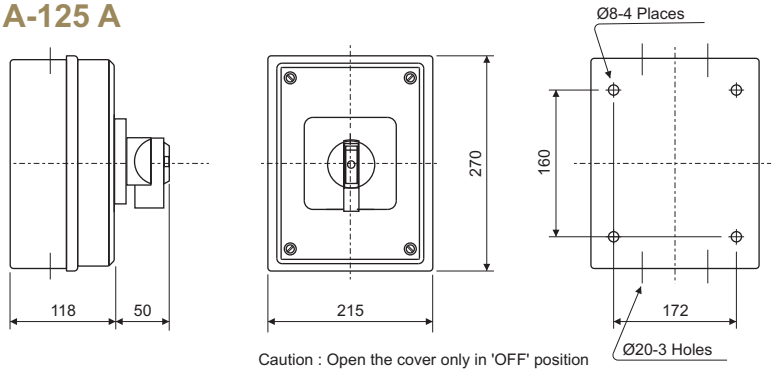

- Switch mounted in Steel enclosure
- Round padlocking device (max. 3 padlocks) to prevent the Switch from being made ON by unauthorized personnel
- Degree of protection : IP53
- Knob version available on request
- Red / Yellow-handle colour for Main / Emergency switches
- Enclosure colour : Dark grey base and light grey cover
- Fourth pole can be added
- Door Interlock

All dimensions in mm.

Add on Main Pole (16 A-63 A)

For Switch Code	Code for Front Mounting Switch	Code for Rear Mounting Switch
LB116	LB120	LB120
LB120	FMC20	RMC20

For Switch Code	Code for Front Mounting Switch	Code for Rear Mounting Switch
LB225	LB232	LB232
LB232	FMC32	RMC32
LB240	LB263	LB263
LB263	FMC63	RMC63

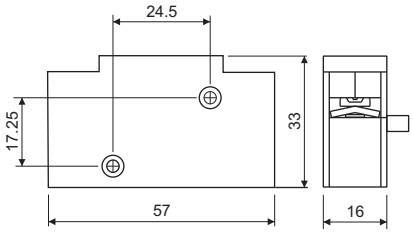

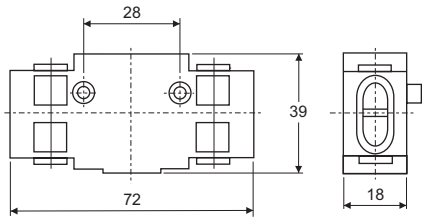

- Equivalent switch electrical rating
- Used as 4th / 5th pole on either side of the switch

Add on Main Pole (80 A-125 A)

For Switch Code	Code for Rear Mounting Switch	Code for FM Switch
LB4080	LB4125 RMC125	LB4125 FMC125
LB4100		
LB4125		

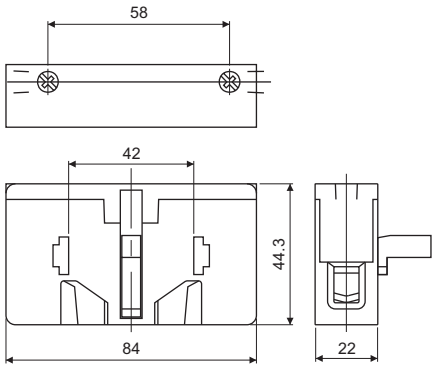

- Equivalent switch electrical rating
- Used as 4th / 5th pole on either side of the switch

Applications

For switching action of additional pole, when mounted with the switch. The additional pole on either side of the switch can be used to switch on any single phase requirements simultaneously.

Add on Neutral Pole (16 A-63 A)

For Switch Code	Code for Front Mounting Switch	Code for Rear Mounting Switch
LB116	LB120	LB120
LB120	FNC20	RNC20

For Switch Code	Code for Front Mounting Switch	Code for Rear Mounting Switch
LB225	LB232	LB232
LB232	FNC32	RNC32
LB240	LB263	LB263
LB263	FNC63	RNC63

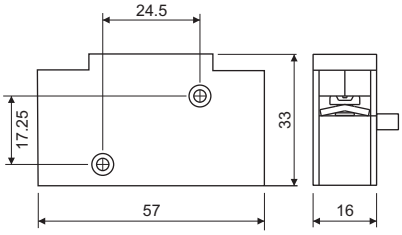

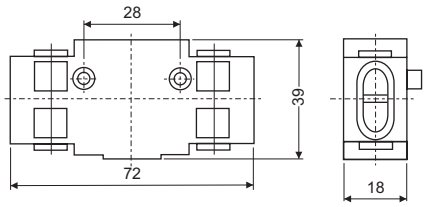

- Early make late break contact
- Can be fitted on either side of the switch

Applications

To be used as Neutral Conductor to the switch.

All dimensions in mm.

Add-on Neutral Pole (80A-125A)

For Switch Code	Code for Rear Mounting Switch	Code for Front Mounting Switch
LB4080	LB4125 RNC125	LB4125 FNC125
LB4100		
LB4125		

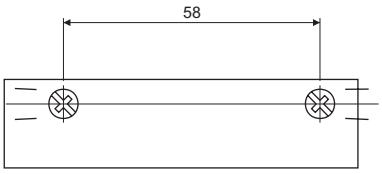

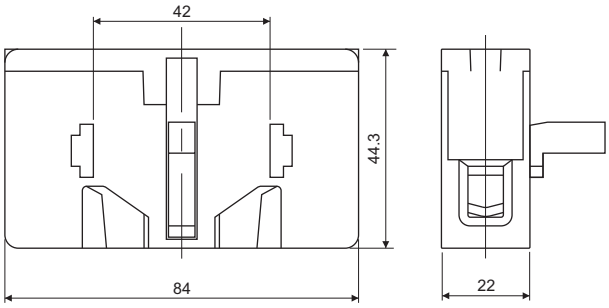

- Early make late break contact
- Can be fitted on either side of the switch

Applications
To be used as Neutral Conductor to the switch.

Add-on Auxiliary Pole

For Switch Code	Code for Front Mounting Switch	Code for Rear Mounting Switch
LB116	LB120 FAC16	LB120 RAC16
LB120		
LB225	LB263 FAC16	LB263 RAC16
LB232		
LB240		
LB263		
LB4080	LB4125 FAC16	LB4125 RAC16
LB4100		
LB4125		

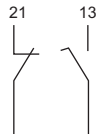

- 1NO contact early break / late make + 1NC contact
- Can be fitted on either side of the Switch

Applications
Auxiliary contact module has two contacts, 'NO and NC'. 'NO' contact is early break, late make contact. This is used to trigger any auxiliary circuits.

Rating

IEC / EN	16A, 500V	
AC-15	220-240V 380-440V	6A 4A

Terminal Cross Section

Single/Multiple Strand Wire	min. mm^2	1.0
	max. mm^2	1.5
American Wire Gauge	AWG	16

LB116-LB120

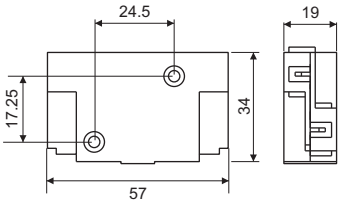

LB225-LB263

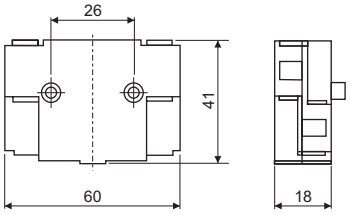

LB4080-LB4125

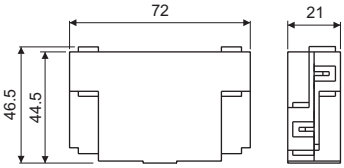

All dimensions in mm.

Knobs & Handles

	Code	Type
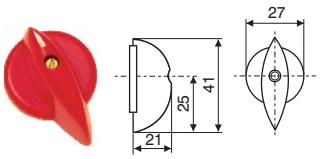	TD	Tear Drop Knob
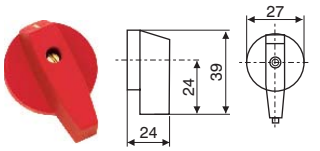	FL	Flag Knob
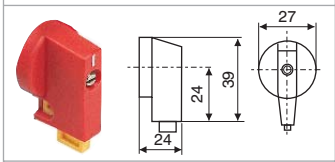	FP	Flag Knob Padlockable
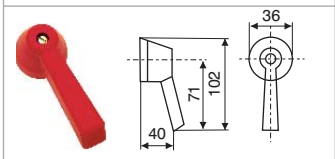	PG	Pistol Grip Handle
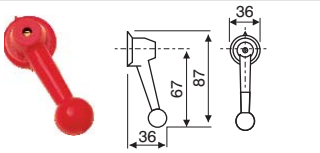	BG	Ball Grip Handle

	A	B	C	D
TD[1]	27	41	25	21
TD	36	52	31	25

	A	B	C	D
FL[1]	27	39	24	24
FL	36	50	27	25

	Code	Type
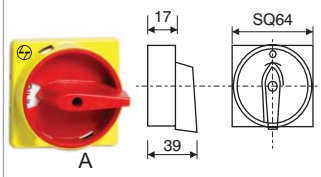	RD	Round Knob, Padlockable
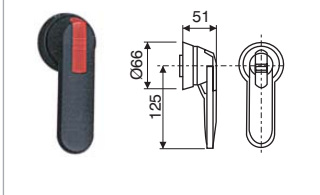	RH	Roll Handle, Padlockable
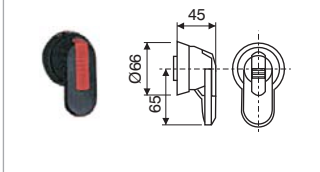	SH	Short Handle Padlockable
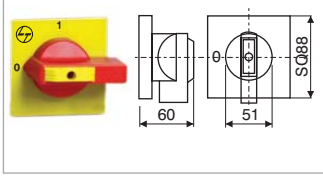	LH	Leech Handle Padlockable

LB Switches: Knob/Handle and Mounting Options

Mounting	LB116	LB120	LB225	LB232	LB240	LB263	LB4080	LB4100	LB4125
B03	FL[1], TD[1]	FL[1], TD[1]	FL, TD	FL, TD	FL, TD	FL, TD	-	-	-
B19	FP, FL[1], TD[1]	FP, FL[1], TD[1]	-	-	-	-	-	-	-
B40	FP	FP	-	-	-	-	-	-	-
B13	-	-	FL, PG, BG	FL, PG, BG	FL, PG, BG	FL, PG, BG	FL, PG, BG	FL, PG, BG	FL, PG, BG
B30	-	-	TD, FL-	TD, FL	TD, FL	TD, FL	FL	FL	FL
B33	-	-	RD	RD	RD	RD	RD	RD	RD
B63	-	-	TD, FL	TD, FL	TD, FL	TD, FL	FL	FL	FL
B23	-	-	TD, FL	TD, FL	TD, FL	TD, FL	FL, BG	FL, BG	FL, BG
MB34	FP	FP	SH, RD, LH, RH	SH, RD, LH, RH	SH, RD, LH, RH	SH, RD, LH, RH	SH, RD, LH, RH	SH, RD, LH, RH	SH, RD, LH, RH
MB42	FL[1]	FL[1]	BG, PG	BG, PG	BG, PG	BG, PG	BG, PG	BG, PG	BG, PG
AB31S, SB31S	RD	RD	RD	RD	RD	RD	-	-	-
B31SM	FP	FP	RD	RD	RD	RD	-	-	-
B31M, AB31M, SB31M	-	-					-	-	-
B31L, AB31L	-	-	-	-	-	-	RD, LH BG, RH	RD, LH BG, RH	RD, LH BG, RH

The knobs/handles highlighted in red are standard, others indicate possible options.

LB Switches: Knob/Handle, Enclosure Mounting Options

Enclosure Mounting	B31SM	B31M	B31L	SB31S	SB31M	SB31L	AB31S	AB31M	AB31L
Knob/Handle	RD, FL, FP	RD	RD, LH	RD, BG PG	RD, LH BG, PG	LH, BG, PG, RD	RD, FL, FP	RD, LH, BG, PG	RD, LH, BG, PG

The knobs/handles highlighted in red are standard, others indicate possible options.

All dimensions in mm.

Switching Programme

Code : 31153 3 Pole Changeover

	R	Y	B	R	Y	B
I	X	X	X			
O						
II				X	X	X

Code : 31154 4 Pole Changeover

	R	Y	B	N	R	Y	B	N
I	X	X	X	X				
O								
II					X	X	X	X

Features

- 25 A - 125 A, 3 and 4 Pole, AC 23 duty
- Available with and without SS enclosure
- Different mounting options
- Excellent switching performance
- High short circuit capacity
- Door interlock and padlock available
- Provides adequate space for cable termination and very convenient for installation termination

B13

25 A-63 A, Front Mounting

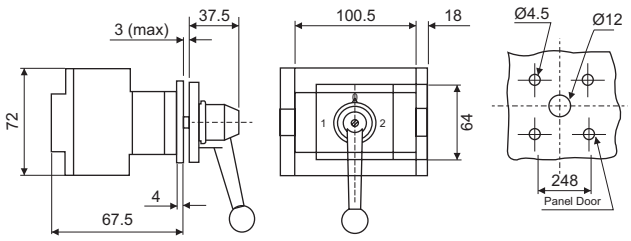

- 4 Hole front panel mounting
- Degree of protection : Front IP55

B21

25 A-63 A, Rear Mounting

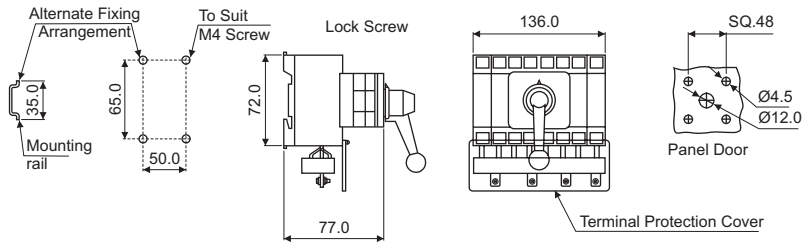

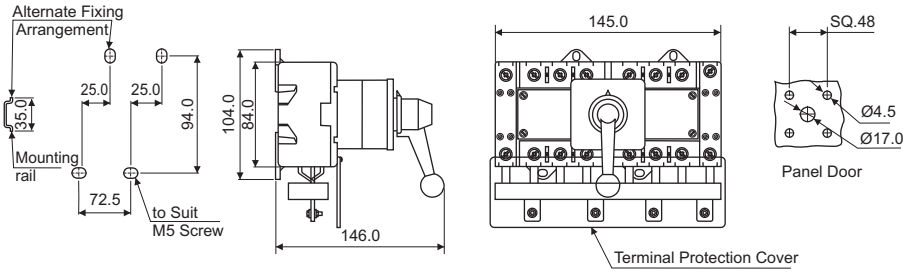

All dimensions in mm.

MB42

25 A-63 A, Rear Mounting

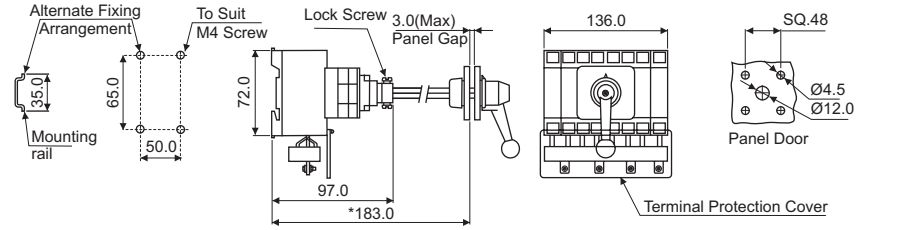

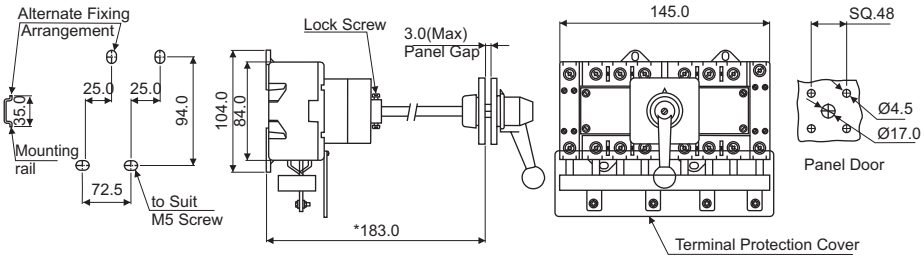

MB34

25 A-63 A, Rear Mounting

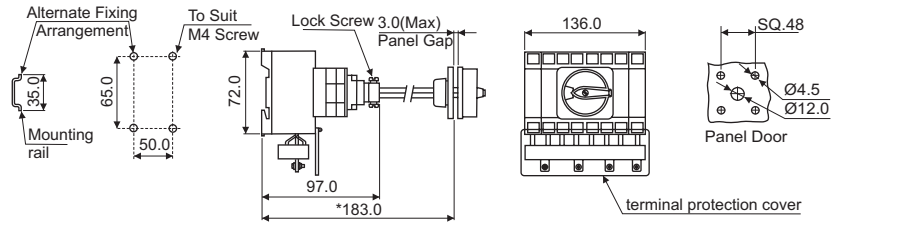

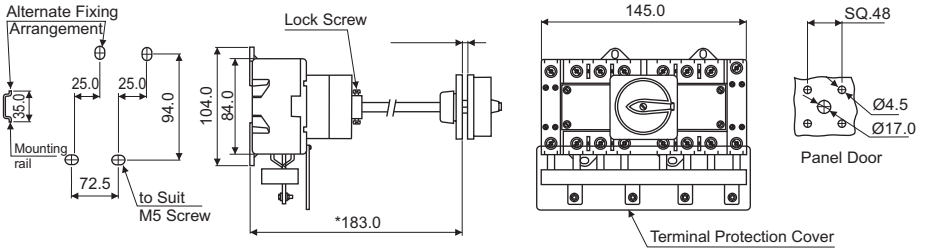

- 2 Hole rear mounting or snap mounting on DIN EN50022 rail (35 mm) and operable from the front (door) coupled with door mechanism
- Door interlock (door operable only in OFF position)
- Degree of protection : Front IP65
- Rigid metal shaft/switch assembly
- Switch with round padlocking device to prevent the switch from being made ON by unauthorized persons
- Max. 3 padlocks
- Adjustable mounting by cutting the metal shaft to appropriate length to suit panel height
- Specific length of shaft can be offered on request

All dimensions in mm.

Features

- 25 A - 125 A, 4 Pole, AC 23 duty
- Range available : 3 Pole Changeover - 31153, 3 Pole + Neutral Pole Changeover - 31154
- Powder coated steel enclosure with separate earthing or IP65, ABS enclosure having interlock to open the lead only in OFF position for safety
- Colour : Yellow front plate and Red ball grip handle

B31L

25 A-63 A

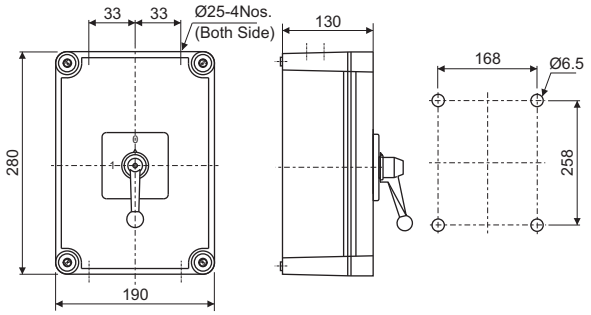

- Switch mounted in grey ABS / Polycarbonate optional enclosure with IP65 protection and interlock provided to open the lid in OFF position

SB31

25 A-63 A

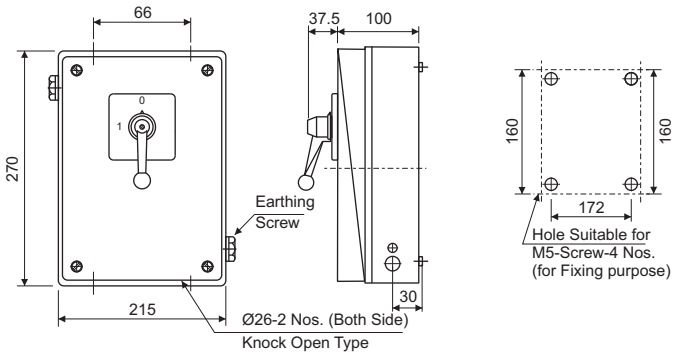

- Powder coated steel enclosure
- Interlock provided to remove cover only in OFF position for safety
- Separate earthing provided
- Colour : Yellow front plate and Red ball grip handle / grey front plate and Black ball grip handle

All dimensions in mm.

SB31XL

80 A-125 A

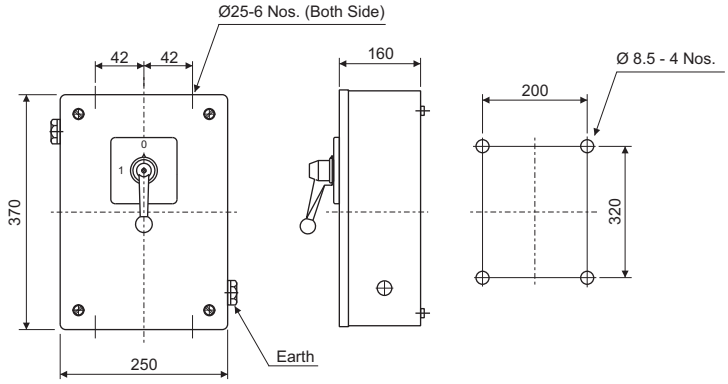

- Powder coated steel enclosure
- Separate earthing provided
- Interlock provided to remove cover only in OFF position for safety
- Colour : Yellow front plate and Red ball grip handle / grey front plate and Black ball grip handle

Changeover Switches: Knob/Handle and Mounting Options

Mounting	LB225	LB232	LB240	LB263	LB4080	LB4100	LB4125
B13	PG, BG	PG, BG	PG, BG	PG, BG	-	-	-
MB34	RD	RD	RD	RD	RD	RD	RD
MB42	PG, BG	PG, BG	PG, BG	PG, BG	PG, BG	PG, BG	PG, BG
B21	BG, PG	BG, PG	BG, PG	BG, PG	PG, BG	BG, PG	BG, PG
SB31	BG, PG	BG, PG	BG, PG	BG, PG	-	-	-
SB31XL	-	-	-	-	BG, PG	BG, PG	BG, PG
B31L	RD, BG	RD, BG	RD, BG, PG	RD, BG, PG	-	-	-

All dimensions in mm.

Load Break and Changeover Switches

LB	XXXX	XXXXX	XXXXX	XX	XX
Load Break Switch	**Switch Rating**	**Programme Code**	**Mounting Options**	**Knob Options**	**Colour**

Example

- LB Switches, 25 A, 3P, 9 O'clock, 4 hole front mounting, yellow front plate, red tear drop knob — LB 225 31309 B13 TD YR
- LB Switches, 63 A, 3P, 9 O'clock, 4 hole front mounting, with metal shaft, yellow front plate, red round knob — LB 263 31309 Mb34 RD YR
- LB Switches 40 A, 3P, 12 O'clock OFF in B31SM enclosure, grey front plate, black round knob — LB 240 31300 B31SM RD GB
- LB Changeover Switch, 63 A, 3P, metal enclosure with interlock, yellow front plate, red ball grip handle — LB 263 31153 SB31 BG YR

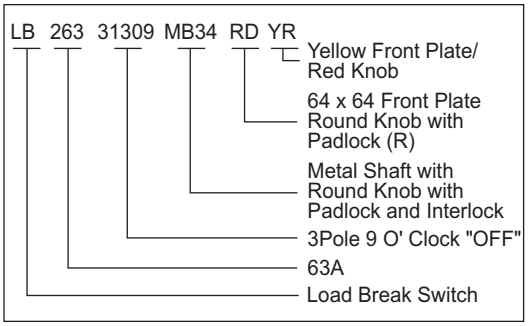

Accessories

X	XX	XXX
F-Front Mounting	MC-Main Module	20 - 16 A to 20 A
R-Rear Mounting	NC-Neutral Module	32 - 25 A to 32 A
		63 - 40 A to 63 A
		80 - 80 A
		125 - 100 A, 125 A & 80 A
	AC-Auxiliary Module	

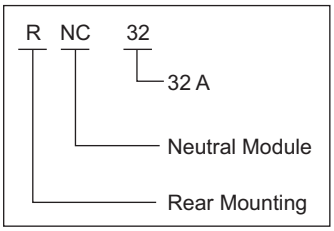

Product improvement is a continuous process. Hence, data given in this catalogue is subject to change without intimation. Please a certain Product Certification and Listing.

Get the Switchgear Training Edge!

Aimed at maximizing productivity, conserving energy, minimizing costs and enhancing safety, our Electrical & Automation training programmes have benefitted 1.12 Lakh professionals in the last over 25 years. These training programmes are highly beneficial as they provide right exposure and impart knowledge on selection, installation, maintenance and testing of Electrical & Automation products.

So gain the advantage and go the extra mile with:

- 14 courses on contemporary topics
- Courses applicable to all switchgear brands
- Training Centers in Pune, Lucknow, Coonoor & Vadodara
- Blend of theory and practical experience

The typical training programmes cover:

- Low Voltage & Medium Voltage Switchgear
- Switchboard Electrical Design
- AC Drives & Building Management Solutions
- Protective Relays, Earthing & Harmonics
- Energy Conservation & Management

Please contact any of the training centres for participation and detailed training programme schedule.

Pune
Larsen & Toubro Limited
Switchgear Training Centre
T-156/157, MIDC, Bhosari,
Pune: 411 026.
Tel.: (020) 2712 0037 / 2712 0653
Fax.: (020) 2712 2933
E-mail : STC-PUNE@LNTEBG.COM

Lucknow
Larsen & Toubro Limited
Switchgear Training Centre
C-6&7, UPSIDC, P.O. Sarojini Nagar,
Lucknow: 226 008.
Tel.: (0522) 247 6110 / 099355 63239
Fax.: (0522) 247 6015
E-mail : STC-LUCKNOW@LNTEBG.COM

Coonoor
Larsen & Toubro Limited
Switchgear Training Centre Ooty-Coonoor
Main Road, Yellanahalli
P.O., The Nilgiris – 643 243.
Tel.: (0423) 251 7107
Fax.: (0423) 251 7158
E-mail : STC-COONOOR@LNTEBG.COM

New

Vadodara
Larsen & Toubro Limited
Switchgear Training Centre
Behind L&T Knowledge City,
Near Village Ankhol,
Vadodara - 390 019.
Tel: +91 265 245 7805
E-mail : STC-VADODARA@LNTEBG.COM

Electrical Standard Products (ESP) Branch Offices:

REGISTERED OFFICE AND HEAD OFFICE
L&T House, Ballard Estate
P. O. Box 278
Mumbai 400 001
Tel: 022-67525656
Fax: 022-67525858
Website: www.Larsentoubro.com

ELECTRICAL STANDARD PRODUCTS (ESP)
501, Sakar Complex I
Opp. Gandhigram Rly. Station
Ashram Road
Ahmedabad 380 009
Tel: 079-66304006-11
Fax: 079-66304025
e-mail: esp-ahm@LNTEBG.com

38, Cubbon Road, P. O. Box 5098
Bangalore 560 001
Tel: 080-25020100 / 25020324
Fax: 080-25580525
e-mail: esp-blr@LNTEBG.com

131/1, Zone II
Maharana Pratap Nagar
Bhopal 462 011
Tel: 0755-3080511 / 05 / 08 / 13 / 17 / 19
Fax: 0755-3080502
e-mail: esp-bho@LNTEBG.com

Plot No. 559, Annapurna Complex
Lewis Road
Bhubaneswar 751 014
Tel: 0674-6451342, 2436690, 2436696
Fax: 0674-2537309
e-mail: nayakd@LNTEBG.com

SCO 32, Sector 26-D
Madhya Marg, P. O. Box 14
Chandigarh 160 019
Tel: 0172-4646840, 4646853
Fax: 0172-4646802
e-mail: esp-chd@LNTEBG.com

L&T Construction Campus
TC-1 Building, II Floor
Mount-Poonamallee Road
Manapakkam
Chennai 600 089
Tel: 044-2270 6800
Fax: 044-22706940
e-mail: esp-maa1@LNTEBG.com

67, Appuswamy Road
Post Bag 7156
Opp. Nirmala College
Coimbatore 641 045
Tel: 0422-2588120 / 1 / 5
Fax: 0422-2588148
e-mail: esp-cbe@LNTEBG.com

Khairasol, Degaul Avenue
Durgapur 713 212
Tel: 2559848, 2559849, 2559844
Fax: 0343-2553614
e-mail: esp-dgp@LNTEBG.com

5, Milanpur Road, Bamuni Maidan
Guwahati 781 021
Tel: +91 8876554410 / 8876554417
Fax: 361-2551308
e-mail: hazrasudipto@LNTEBG.com

II Floor, Vasantha Chambers
5-10-173, Fateh Maidan Road
Hyderabad 500 004
Tel: 040-67015052
Fax: 040-23296468
e-mail: esp-hyd@LNTEBG.com

Monarch Building, 1st Floor
D-236 & 237, Amrapali Marg
Vaishali Nagar
Jaipur 302 021
Tel: 0141-4385914 to 18
Fax: 0141-4385925
e-mail: esp-jai@LNTEBG.com

Akashdeep Plaza, 2nd Floor
P. O. Golmuri
Jamshedpur 831 003
Jharkhand
Tel: 0657-2312205 / 38
Fax: 0657-2341250
e-mail: esp-jam@LNTEBG.com

Skybright Bldg; M. G. Road
Ravipuram Junction, Ernakulam
Kochi 682 016
Tel: 0484-4409420 / 4 / 5 / 7
Fax: 0484-4409426
e-mail: esp-cok@LNTEBG.com

3-B, Shakespeare Sarani
Kolkata 700 071
Tel: 033-44002572 / 3 / 4
Fax: 033-22821025 / 7587
e-mail: esp-ccu@LNTEBG.com

A28, Indira Nagar, Faizabad Road
Lucknow 226 016
Tel: 0522-4929905 / 04
Fax: 0522-2311671
e-mail: esp-Lko@LNTEBG.com

No: 73, Karpaga Nagar, 8th Street
K. Pudur
Madurai 625 007
Tel: 0452-2537404, 2521068
Fax: 0452-2537552
e-mail: esp-mdu@LNTEBG.com

EBG North Wing Office-Level 2
Gate 7, Powai Campus
Mumbai 400 072
Tel: 022-67052874 / 2737 / 1156
Fax: 022-67051112
e-mail: esp-bom@LNTEBG.com

12, Shivaji Nagar
North Ambajhari Road
Nagpur 440 010
Tel: 0712-2260012 / 6606421
Fax: 2260030 / 6606434
e-mail: esp-nag@LNTEBG.com

32, Shivaji Marg
P. O. Box 6223
New Delhi 110 015
Tel: 011-41419514 / 5 / 6
Fax: 011-41419600
e-mail: esp-del@LNTEBG.com

L&T House
P. O. Box 119
191/1, Dhole Patil Road
Pune 411 001
Tel: 020-66033395 / 66033279
Fax: 020-26164048 / 26164910
e-mail: esp-pnq@LNTEBG.com

Crystal Tower,
4th Floor, G. E. Road
Telibandha
Raipur - 492 006
Tel: 0771-4283214
e-mail: esp-raipur@LNTEBG.com

3rd Floor
Vishwakarma Chambers
Majura Gate, Ring Road
Surat 395 002
Tel: 0261-2473726
Fax: 0261-2477078
e-mail: esp-sur@LNTEBG.com

Radhadaya Complex
Old Padra Road
Near Charotar Society
Vadodara 390 007
Tel: 0265-6613610 / 1 / 2
Fax: 0265-2336184
e-mail: esp-bar@LNTEBG.com

48-8-16, Dwarakanagar
Visakhapatnam 530 016
Tel: 0891-6701125 to 30
Fax: 0891-6701139
e-mail: esp-viz@LNTEBG.com

Product improvement is a continuous process. For the latest information and special applications, please contact any of our offices listed here.

L&T SWITCHGEAR
SAFE & SURE

LARSEN & TOUBRO

Larsen & Toubro Limited Electrical Standard Products
Powai Campus, Mumbai 400 072
Customer Interaction Center (CIC)
BSNL / MTNL (toll free) : 1800 233 5858
Reliance (toll free) : 1800 200 5858
Tel : 022 6774 5858, Fax : 022 6774 5859
E-mail : cic@LNTEBG.com Website : www.LNTEBG.com

Registered Office: L&T House, N. M. Marg, Ballard Estate, Mumbai 400 001, INDIA

SP50581 R1